RV®

ISC ISO 14001 E055

ISO 9001 JQA-1190

Precision Reduction Gear RV™

N

N Series

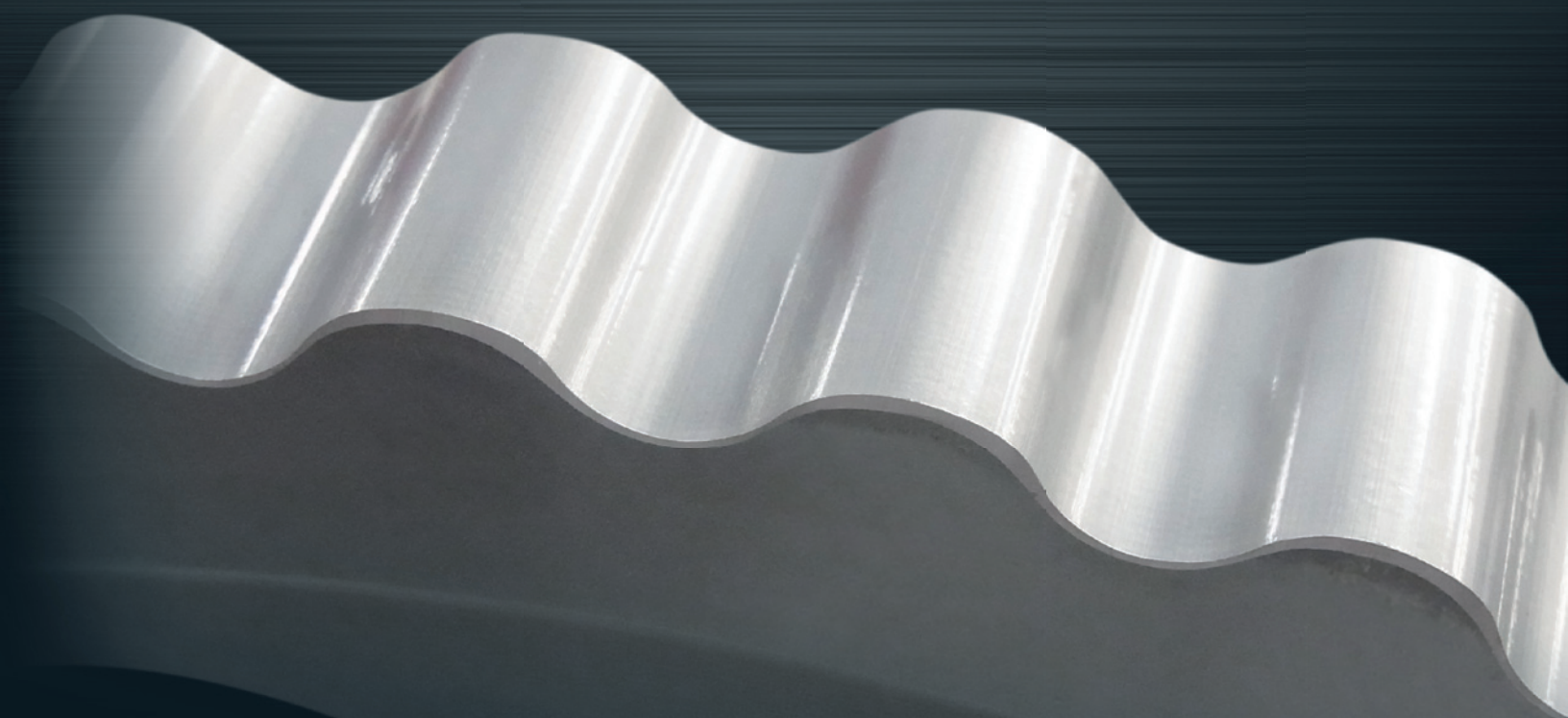

Nabtesco

Contributing to society with our ‘Moving it. Stopping it.’ technologies

Nabtesco manufactures products which are used in everyday life. Our high-accuracy components are essential for moving objects; they may be rarely visible, but are the foundation of everyday objects that you see moving and wonder how. Nabtesco’s technologies are found throughout objects that move and stop people’s lives.

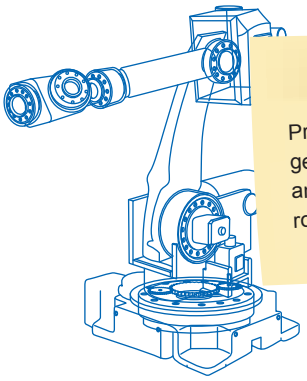

Robots

Precision reduction gears precisely move and stop industrial robots.

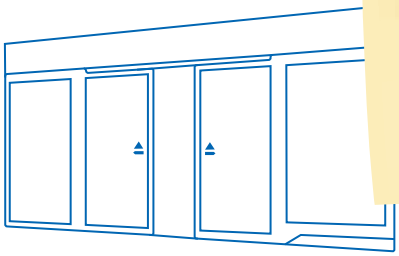

Doors

Nabtesco technology opens and closes automatic doors in buildings and platform doors at train stations.

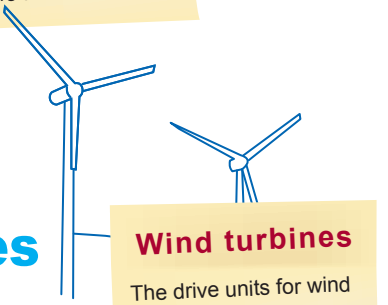

Wind turbines

The drive units for wind turbine generators control the orientation of the wind turbine and the angle of the blades.

Nabtesco technologies are at work in many areas of our daily lives.

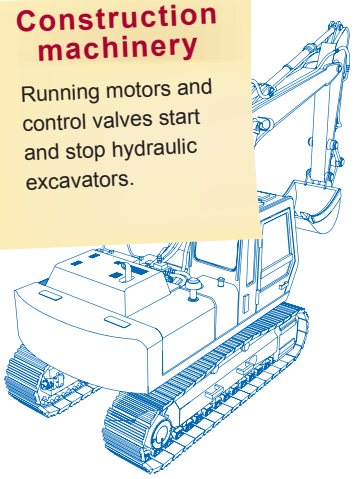

Construction machinery

Running motors and control valves start and stop hydraulic excavators.

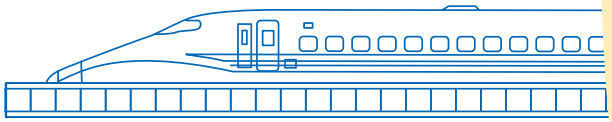

Bullet trains

Brakes and doors ensure safety and comfort for the world-famous Shinkansen bullet trains.

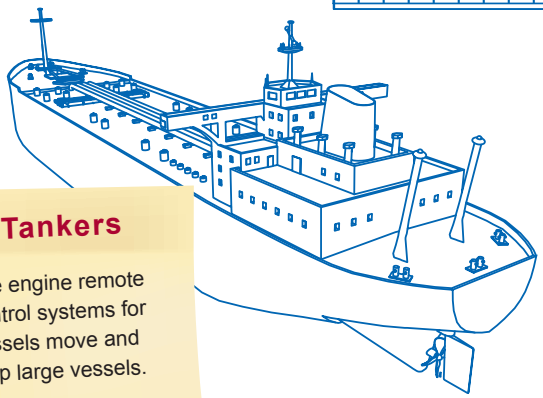

Tankers

The engine remote control systems for vessels move and stop large vessels.

Airplanes

The flight control systems are crucial for the flight safety of aircraft.

CONTENTS

Who is Nabtesco?

The key words for Nabtesco are 'motion control'. We use our strengths in the fields of component and systems technologies to develop highly creative products. Through the Nabtesco Group as a whole, we can also utilize our advantage of expertise to maximum effect in order to further enhance these strengths.
In the air, on land and at sea, we have a leading share in various fields of both international and domestic markets. Nabtesco will continue to evolve by utilizing its strengths in many fields and by exploring the possibilities of the future.

April 2002 Initiation of hydraulic equipment business alliance
October 2003 Business merger

The business alliance between Teijin Seiki and NABCO on hydraulic equipment projects was the beginning of a mutual confirmation by the companies of the other's product configuration, core technologies, corporate strategies and corporate culture. This led to a common recognition that a business merger would be an extremely effective means of increasing corporate value and achieving long-term development. Based on this mutual judgment, in 2003 an equity transfer was conducted to establish Nabtesco as a pure holding company, with both firms as wholly owned subsidiaries. After a year of preparation, both companies were absorbed and amalgamated by means of a short form merger, and Nabtesco was transitioned to an operating holding company.

What is the N series ?	02 – 03
Examples of uses for the N series	04 – 05
Principle of speed reduction	06
N series model code	07
Rating table	08 – 09
External dimensions	10 – 19
Technical Information	
Considering the use of the N series	22
Glossary	23
Product Selection	
Product selection flowchart	24
Model code selection examples	25 – 32
Allowable moment diagram	33
Technical Data	
No-load running torque	34
Low temperature characteristic	35
Efficiency table	36 – 37
Calculation of tilt angle and torsion angle	38
Design Points	
Reduction gear installation components	39 – 41
Input gears	42 – 49
Lubricant VIGOGREASE®	50 – 51
Appendix	
Inertia moment calculation formula	52
Troubleshooting checksheet	53
APPLICATION WORKSHEET	54
VIGOGREASE® Ordering Information	55
Warranty	Back inside cover

RV™ precision reduction gears, already top sellers in the robotics industry, now evolved even further!! Compact N Series gears deliver great potential!!

60% share of the global market for industrial (vertical-articulated) robot joints

* Based on Nabtesco studies

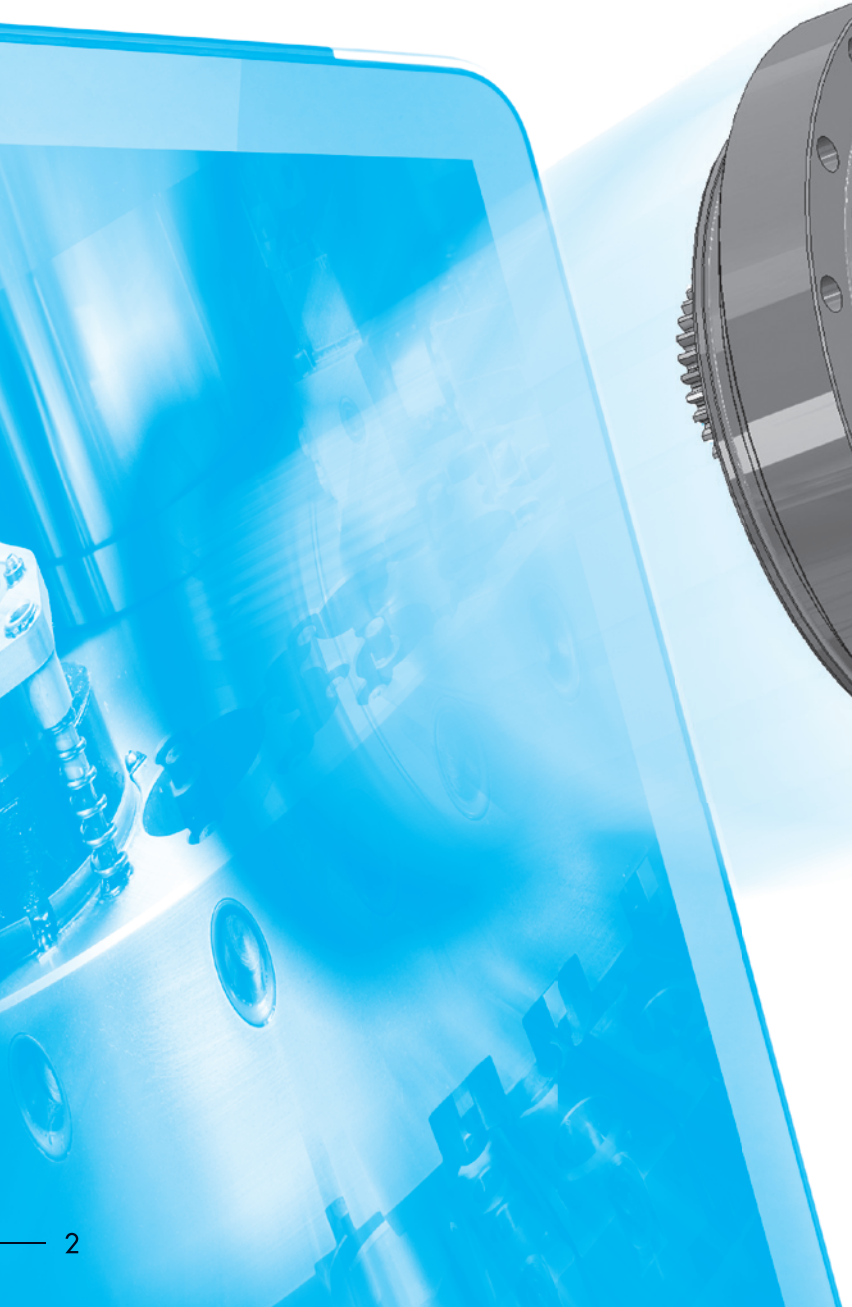

Based on our RV precision reduction gears which achieve 5 million units already shipped, the new N Series models have been made even more compact and lightweight.

N series features

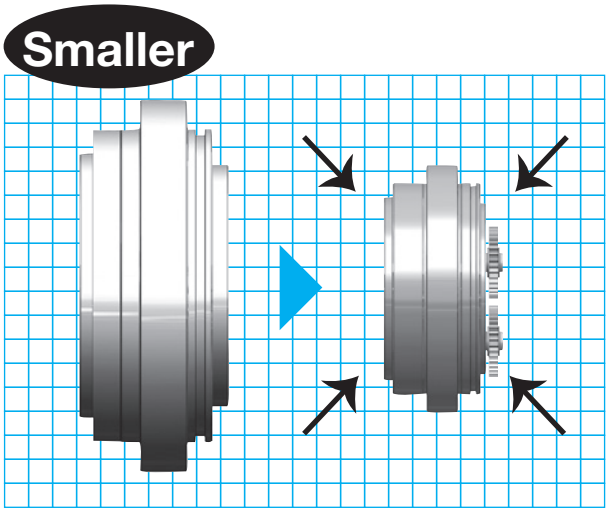

(Compared with our existing products)

External dimensions

8 to 20% smaller

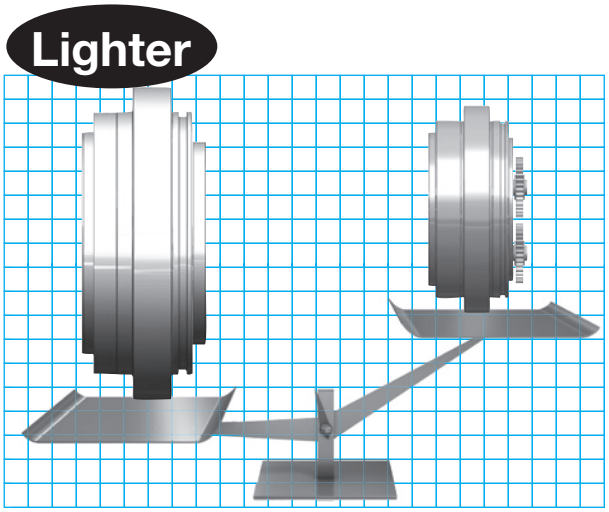

(Compared with our existing products)

Weight

16 to 36% lighter

Model size comparison

Model	RV-40E	RV-42N
Rated Torque (Nm)	412	412
Allowable moment (Nm)	1,666	1,660
Allowable thrust (N)	5,194	5,220
Weight (kg)	9.3	6.3
Outside diameter (mm)	Ø190	Ø159

The same basic performance

Compact and Lightweight

Space-saving design for a wide range of uses

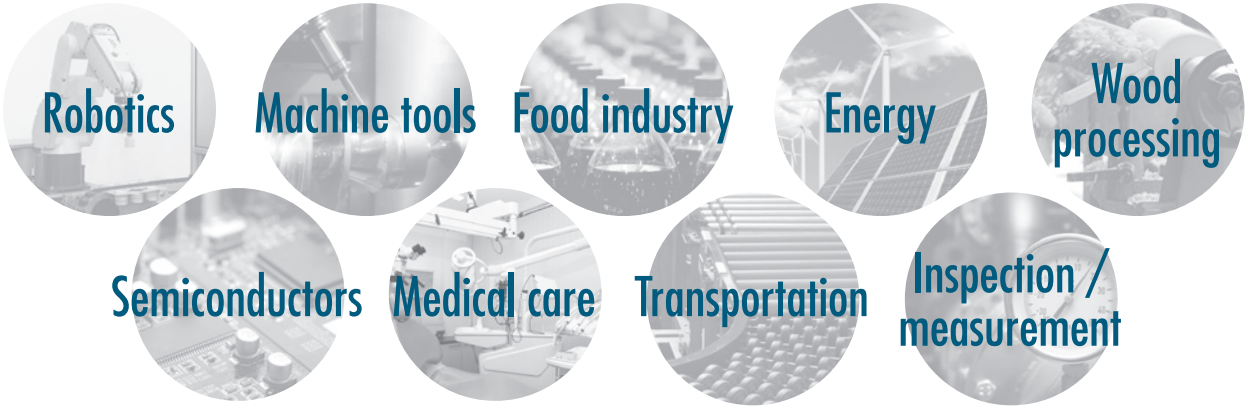

Examples of uses for the N series

Vertical-articulated robot (joint shaft)

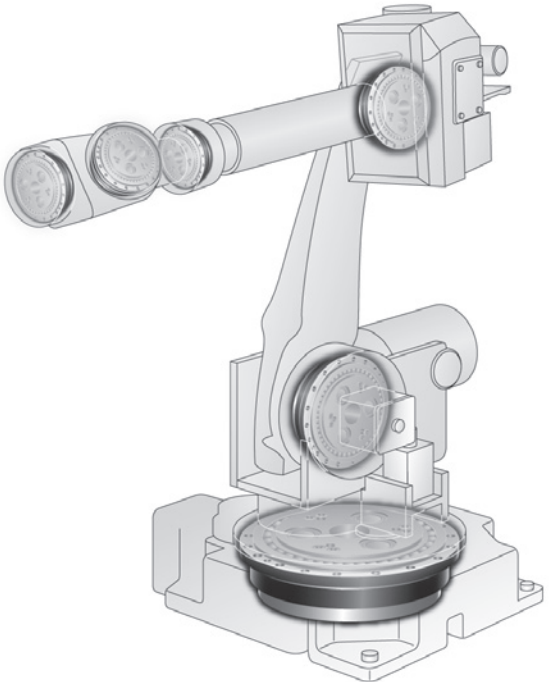

SCARA robot

Machine tool (turret of lathe)

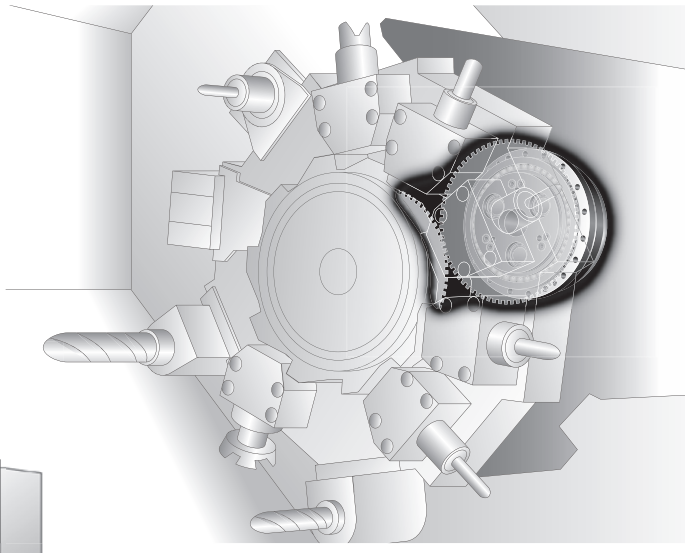

Machine tool ATC magazine

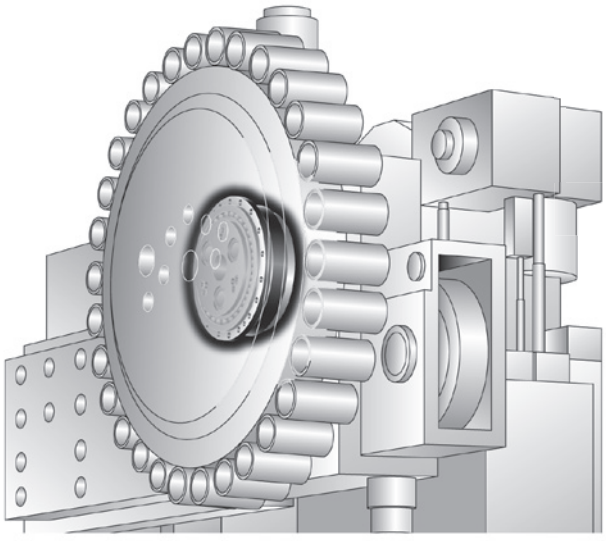

Glass substrate/wafer rotation and positioning

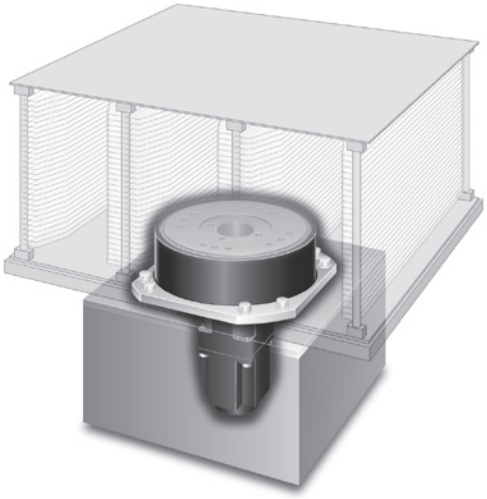

Positioning turntable

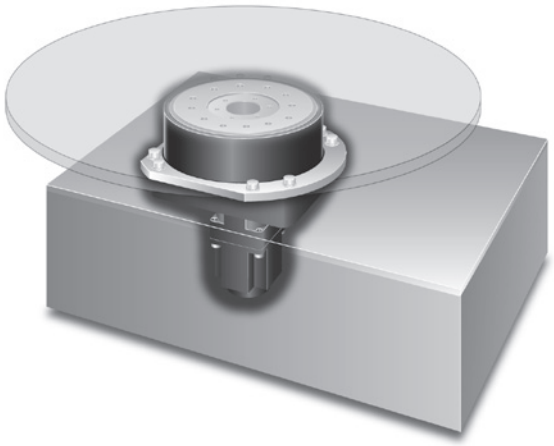

Cover open/close and reverser

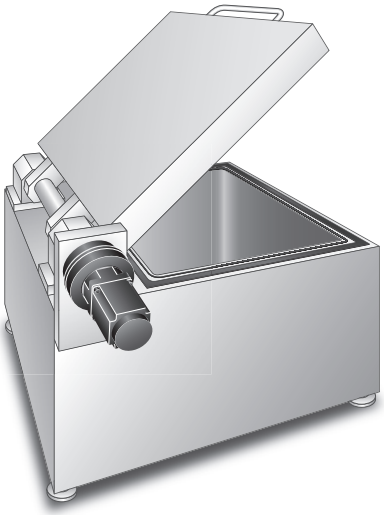

Medical device

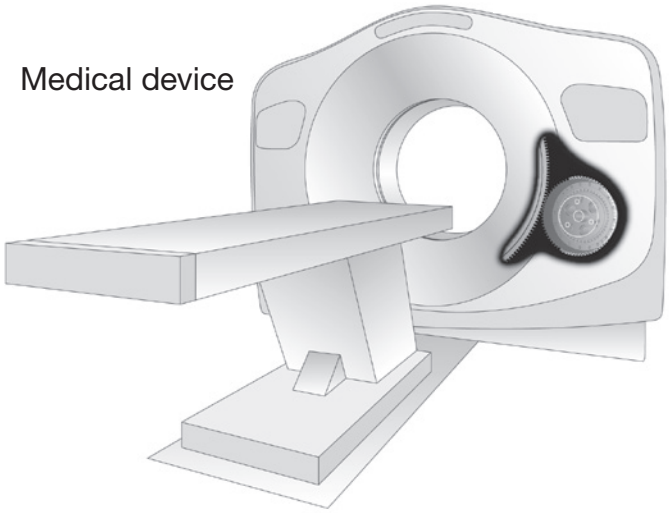

AGV drive

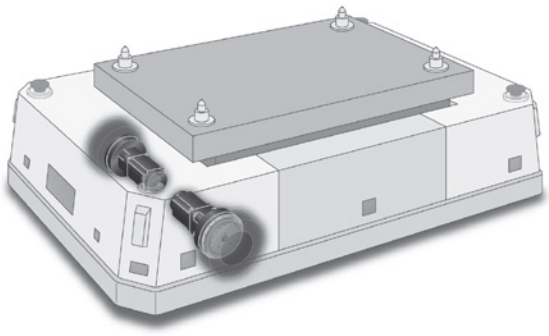

Principle of speed reduction

The RV is a 2-stage precision reduction gear.

1st stage ··· *Spur gear reduction*

- An input gear engages with and rotates spur gears that are coupled to crankshafts. Several overall gear ratios can be provided by selecting various first stage ratios.

2nd stage ··· *Epicyclic gear reduction*

- Crankshafts driven by the spur gears cause an eccentric motion of two epicyclic gears called RV gears that are offset 180 degrees from one another to provide a balanced load.
- The eccentric motion of the RV gears causes engagement of the cycloidal shaped gear teeth with cylindrically shaped pins located around the inside edge of the case.
- In the course of one revolution of the crankshafts the teeth of the RV gear move the distance of one pin in the opposite direction of the rotating cranks. The motion of the RV gear is such that the teeth remain in close contact with the pins and multiple teeth share the load simultaneously.
- The output can be either the shaft or the case. If the case is fixed, the shaft is the output. If the shaft is fixed, the case is the output.

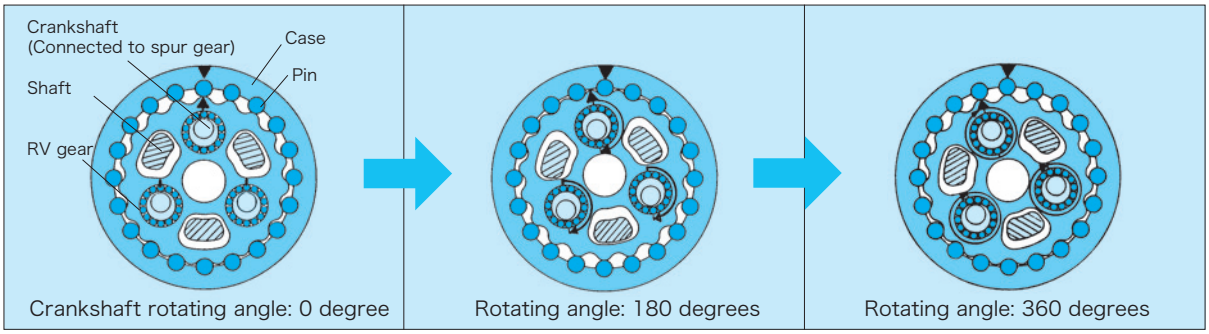

Mechanism block diagram

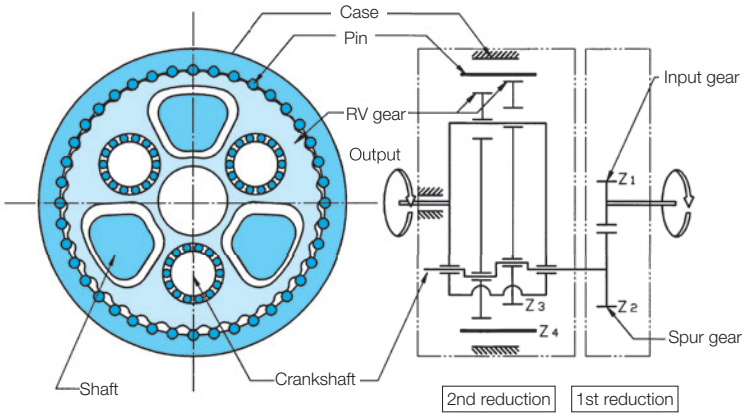

Structure

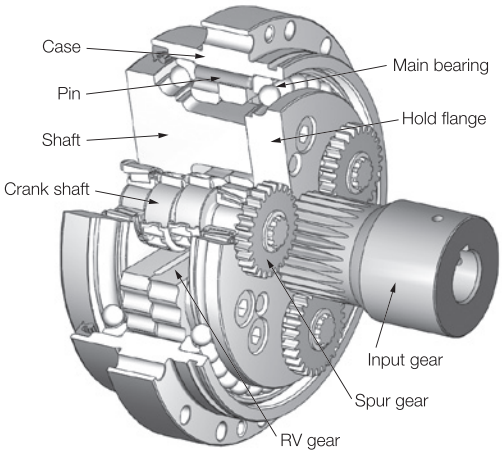

Speed Ratio

The speed ratio is calculated using the formula to the right.

$$R = 1 + \frac{Z2}{Z1} \cdot Z4$$

$$i = \frac{1}{R}$$

R : Speed ratio
Z1: Number of teeth on input gear
Z2: Number of teeth on spur gear
Z3: Number of teeth on RV gear
Z4: Number of pins
i : Reduction ratio

N series model code

Product code

RV – **100** **N** – **102.17** – **A**

Model code	Frame number	Series code	Ratio code	Input gear code	Drawing
RV	25	N	41, 81, 107.66, 126, 137, 164.07	A: Standard gear A B: Standard gear B Z: No gear Refer to page 42.	P.10
	42		41, 81, 105, 126, 141, 164.07		P.11
	60		41, 81, 102.17, 121, 145.61, 161		P.12
	80		41, 81, 101, 129, 141, 171		P.13
	100		41, 81, 102.17, 121, 141, 161		P.14
	125		41, 81, 102.17, 121, 145.61, 161		P.15
	160		41, 81, 102.81, 125.21, 156, 201		P.16
	380		75, 93, 117, 139, 162, 185		P.17
	500		81, 105, 123, 144, 159, 192.75		P.18
	700		105, 118, 142.44, 159, 183, 203.52		P.19

.

Direction of rotation and gear ratio

The overall speed ratio i (of the First and Second reduction stages) will differ between shaft rotation and case rotation, and can be calculated from the speed ratio.

Shaft rotation

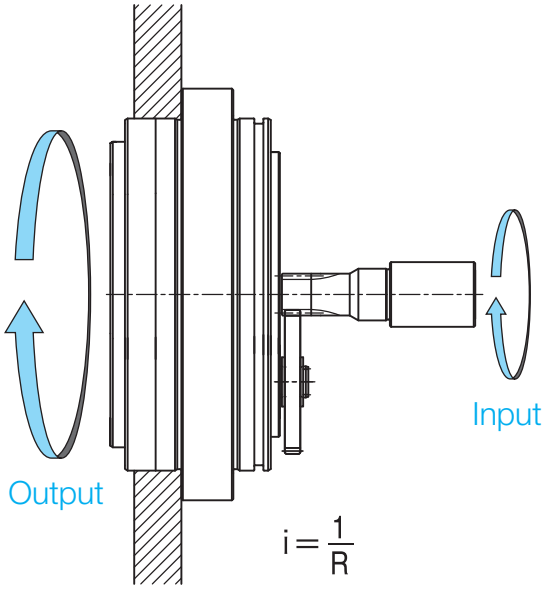

Case rotation

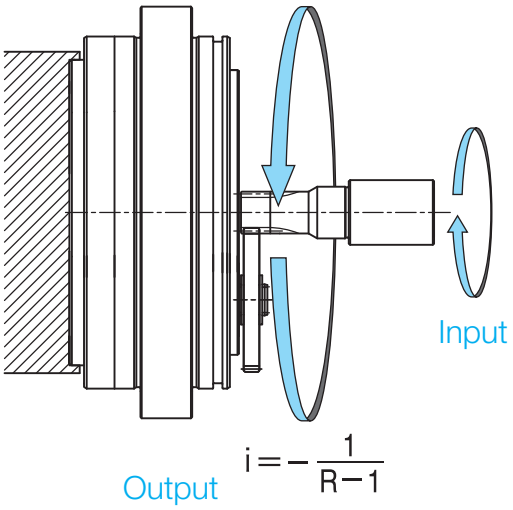

The sign “i” in the above equations signifies the speed reduction ratio of the output shaft rotation to the input shaft rotation. “+” signifies the output shaft rotation in the same direction as the input shaft. “-” signifies the same in the reverse direction.

Rating table

Output speed (rpm)				5	10	15	20	25	30	40	50	60
Model	Ratio code	R Speed ratio		Output torque (Nm) / input capacity (kW)								
		Shaft rotation	Case rotation									
RV-25N	41	41	40	341 / 0.25	277 / 0.41	245 / 0.55	255 / 0.67	210 / 0.79	199 / 0.89	183 / 1.09	171 / 1.28	162 / 1.45
	81	81	80									
	107.66	323/3	320/3									
	126	126	125									
	137	137	136									
	164.07	2133/13	2120/13									
RV-42N	41	41	40	573 / 0.43	465 / 0.70	412 / 0.92	378 / 1.13	353 / 1.32	335 / 1.50	307 / 1.84	287 / 2.15	272 / 2.44
	81	81	80									
	105	105	104									
	126	126	125									
	141	141	140									
	164.07	2133/13	2120/13									
RV-60N	41	41	40	834 / 0.62	678 / 1.01	600 / 1.35	550 / 1.65	515 / 1.93	487 / 2.19	447 / 2.68	418 / 3.13	396 / 3.55
	81	81	80									
	102.17	1737/17	1720/17									
	121	121	120									
	145.61	1893/13	1880/13									
	161	161	160									
RV-80N	41	41	40	1,090 / 0.82	885 / 1.32	784 / 1.76	719 / 2.15	673 / 2.52	637 / 2.86	584 / 3.50	546 / 4.09	517 / 4.64
	81	81	80									
	101	101	100									
	129	129	128									
	141	141	140									
	171	171	170									
RV-100N	41	41	40	1,390 / 1.04	1,129 / 1.69	1,000 / 2.24	917 / 2.74	858 / 3.21	812 / 3.65	745 / 4.46	697 / 5.21	660 / 5.92
	81	81	80									
	102.17	1737/17	1720/17									
	121	121	120									
	141	141	140									
	161	161	160									
RV-125N	41	41	40	1,703 / 1.27	1,383 / 2.07	1,225 / 2.75	1,124 / 3.36	1,051 / 3.93	995 / 4.47	913 / 5.46	854 / 6.39	808 / 7.25
	81	81	80									
	102.17	1737/17	1720/17									
	121	121	120									
	145.61	1893/13	1880/13									
	161	161	160									
RV-160N	41	41	40	2,225 / 1.66	1,807 / 2.70	1,600 / 3.59	1,468 / 4.39	1,373 / 5.13	1,300 / 5.83	1,192 / 7.13		
	81	81	80									
	102.81	1131/11	1120/11									
	125.21	2379/19	2360/19									
	156	156	155									
	201	201	200									
RV-380N	75	75	74	5,178 / 3.87	4,206 / 6.29	3,724 / 8.36	3,416 / 10.22	3,195 / 11.95				
	93	93	92									
	117	117	116									
	139	139	138									
	162	162	161									
	185	185	184									
RV-500N	81	81	80	6,813 / 5.10	5,534 / 8.28	4,900 / 11.00	4,495 / 13.45	4,204 / 15.72				
	105	105	104									
	123	123	122									
	144	144	143									
	159	159	158									
	192.75	192.75	191.75									
RV-700N	105	105	104	9,733 / 7.28	7,905 / 11.83	7,000 / 15.71						
	118	118	117									
	142.44	142.44	141.44									
	159	159	158									
	183	183	182									
	203.52	3867/19	3848/19									

Note: 1. The allowable output speed will differ depending upon the duty ratio, load, and ambient temperature. Contact us regarding use above the allowable output speed Ns1 with a 40% duty ratio.

2. The input capacity (kW) is calculated according to the following calculation formula:

$$\text{Input capacity (kW)} = \frac{2\pi \cdot N \cdot T}{60 \cdot \frac{\eta}{100}} \cdot 10^{3}$$

N: Output speed (rpm)
T : Output torque (Nm)
η =70: Reduction gear efficiency (%)

Note: The input capacity is a reference value.

3. When the reduction gear is used at low temperatures, there will be a larger no-load running torque. Note this characteristic when selecting a motor. (Refer to “Low temperature characteristic” on page 35

T_0 Rated torque (Note 7)	N_0 Rated output Speed	K Rated service life	T_{S1} Allowable acceleration/ deceleration torque	T_{S2} Momentary maximum allowable torque	N_{S0} Allowable Output Speed (Note 1) Duty ratio: 100%	N_{S1} Allowable Output Speed (Note 1) Duty ratio: 40%	Backlash	Lost motion	Angular transmission error (Max.)	Startup efficiency (Typical value)	M_{O1} Allowable moment (Note 4)	M_{O2} Momentary allowable moment (Max.)	Wr Allowable radial load (Note 10)	I Reduced value of the inertia moment for the input shaft (Note 5)	Weight
(Nm)	(rpm)	(h)	(Nm)	(Nm)	(rpm)	(rpm)	(arc.min.)	(arc.min.)	(arc.sec.)	(%)	(Nm)	(Nm)	(N)	(kgm^2)	(kg)
245	15	6,000	612	1,225	57	110	1.0	1.0	70	80	784	1,568	6,975	1.71×10^{-5} 6.79×10^{-6} 4.91×10^{-6} 4.03×10^{-6} 3.62×10^{-6} 3.26×10^{-6}	3.8
412	15	6,000	1,029	2,058	52	100	1.0	1.0	60	80	1,660	3,320	12,662	4.43×10^{-5} 1.87×10^{-5} 1.42×10^{-5} 1.07×10^{-5} 1.01×10^{-5} 7.66×10^{-6}	6.3
600	15	6,000	1,500	3,000	44	94	1.0	1.0	50	80	2,000	4,000	13,605	8.51×10^{-5} 3.93×10^{-5} 2.86×10^{-5} 2.33×10^{-5} 1.84×10^{-5} 1.61×10^{-5}	8.9
784	15	6,000	1,960	3,920	40	88	1.0	1.0	50	80	2,150	4,300	14,163	1.16×10^{-4} 5.17×10^{-5} 3.57×10^{-5} 2.68×10^{-5} 2.40×10^{-5} 1.86×10^{-5}	9.3
1,000	15	6,000	2,500	5,000	35	83	1.0	1.0	50	80	2,700	5,400	16,052	1.58×10^{-4} 7.30×10^{-5} 5.82×10^{-5} 4.85×10^{-5} 4.05×10^{-5} 3.43×10^{-5}	13.0
1,225	15	6,000	3,062	6,125	35	79	1.0	1.0	50	80	3,430	6,860	19,804	2.59×10^{-4} 9.61×10^{-5} 7.27×10^{-5} 5.88×10^{-5} 4.60×10^{-5} 4.01×10^{-5}	13.9
1,600	15	6,000	4,000	8,000	19	48	1.0	1.0	50	80	4,000	8,000	20,619	3.32×10^{-4} 1.54×10^{-4} 1.13×10^{-4} 8.95×10^{-5} 6.75×10^{-5} 4.75×10^{-5}	22.1
3,724	15	6,000	9,310	18,620	11.5	27	1.0	1.0	50	80	7,050	14,100	28,325	7.30×10^{-4} 5.61×10^{-4} 4.93×10^{-4} 3.84×10^{-4} 3.28×10^{-4} 2.64×10^{-4}	44
4,900	15	6,000	12,250	24,500	11	25	1.0	1.0	50	80	11,000	22,000	40,486	1.35×10^{-3} 9.50×10^{-4} 7.44×10^{-4} 6.16×10^{-4} 5.62×10^{-4} 4.16×10^{-4}	57.2
7,000	15	6,000	17,500	35,000	7.5	19	1.0	1.0	50	80	15,000	30,000	46,368	1.61×10^{-3} 1.28×10^{-3} 1.18×10^{-3} 9.11×10^{-4} 8.42×10^{-4} 7.46×10^{-4}	102.0

Note: 4. The allowable moment will differ depending on the thrust load. Check the allowable moment diagram (p. 33).
5. The inertia moment value is for the reduction gear. It does not include the inertia moment for the input gear.
6. For the moment rigidity and torsional rigidity, refer to the calculation of tilt angle and the torsion angle (p. 38).
7. The rated torque is the value that produces the rated service life based on operation at the rated output speed; it does not indicate the maximum load. Refer to the "Glossary" (p.23) and the "Product selection flowchart" (p.24).
8. Contact us regarding speed ratios other than those listed above.
9. The specifications above are based on Nabtesco evaluation methods; this product should only be used after confirming that it is appropriate for the operating conditions of your system.
10. When radial load b is applied within dimension b (see p.29, p.31), use the reduction gear within the allowable radial load.

External dimensions

Model : RV-25N

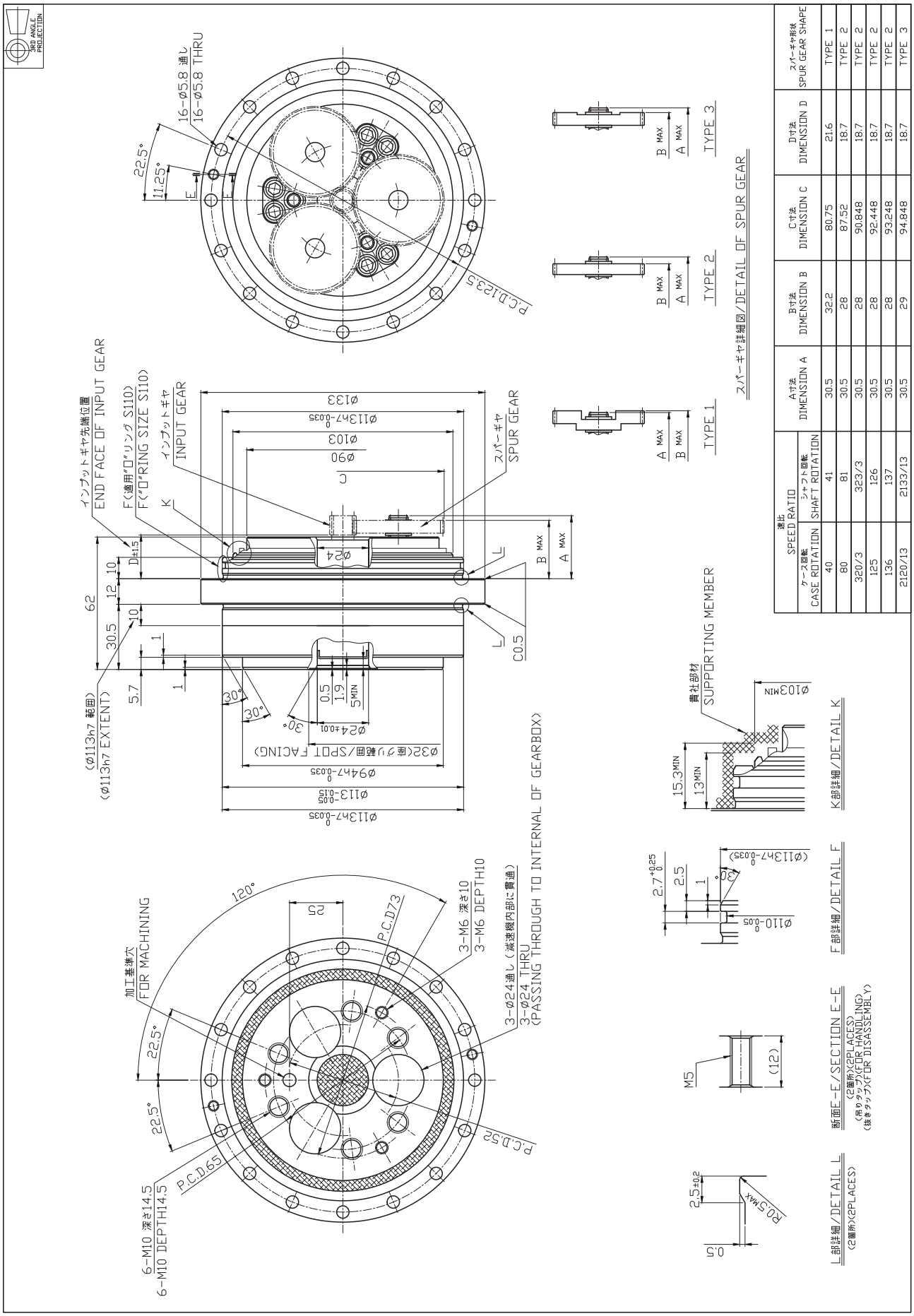

減比 SPEED RATIO		A寸法 DIMENSION A	B寸法 DIMENSION B	C寸法 DIMENSION C	D寸法 DIMENSION D	スパーギヤ形状 SPUR GEAR SHAPE
ケース回転 CASE ROTATION	シャフト回転 SHAFT ROTATION					
40	41	30.5	32.2	80.75	21.6	TYPE 1
80	81	30.5	28	87.52	18.7	TYPE 2
320/3	323/3	30.5	28	90.848	18.7	TYPE 2
125	126	30.5	28	92.448	18.7	TYPE 2
136	137	30.5	28	93.248	18.7	TYPE 2
2120/13	2133/13	30.5	29	94.848	18.7	TYPE 3

Specifications and dimensions are subject to change without notice.

Model : RV-42N

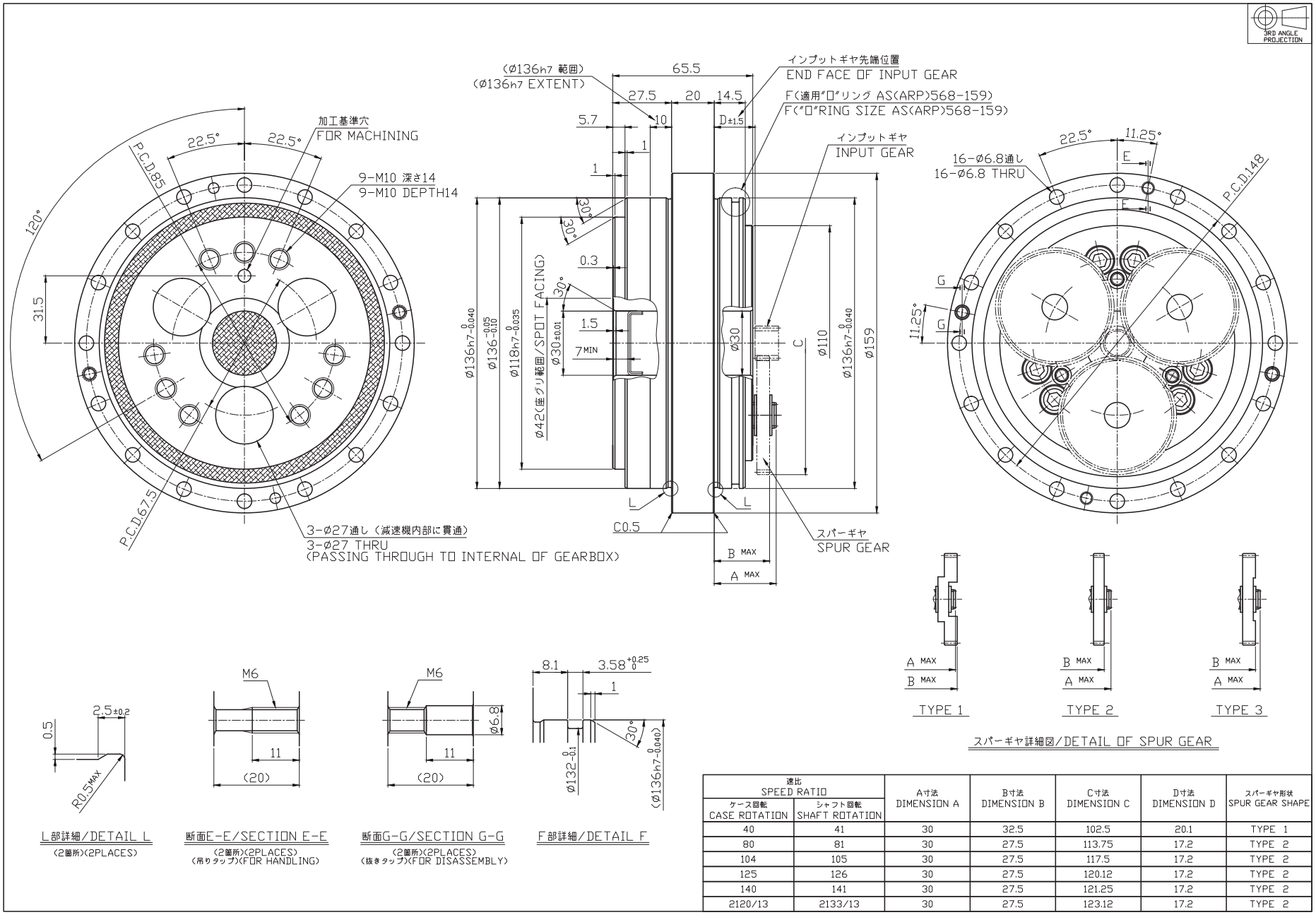

速比 SPEED RATIO		A寸法 DIMENSION A	B寸法 DIMENSION B	C寸法 DIMENSION C	D寸法 DIMENSION D	スパーギヤ形状 SPUR GEAR SHAPE
ケース回転 CASE ROTATION	シャフト回転 SHAFT ROTATION					
40	41	30	32.5	102.5	20.1	TYPE 1
80	81	30	27.5	113.75	17.2	TYPE 2
104	105	30	27.5	117.5	17.2	TYPE 2
125	126	30	27.5	120.12	17.2	TYPE 2
140	141	30	27.5	121.25	17.2	TYPE 2
2120/13	2133/13	30	27.5	123.12	17.2	TYPE 2

Specifications and dimensions are subject to change without notice.

Model : RV-60N

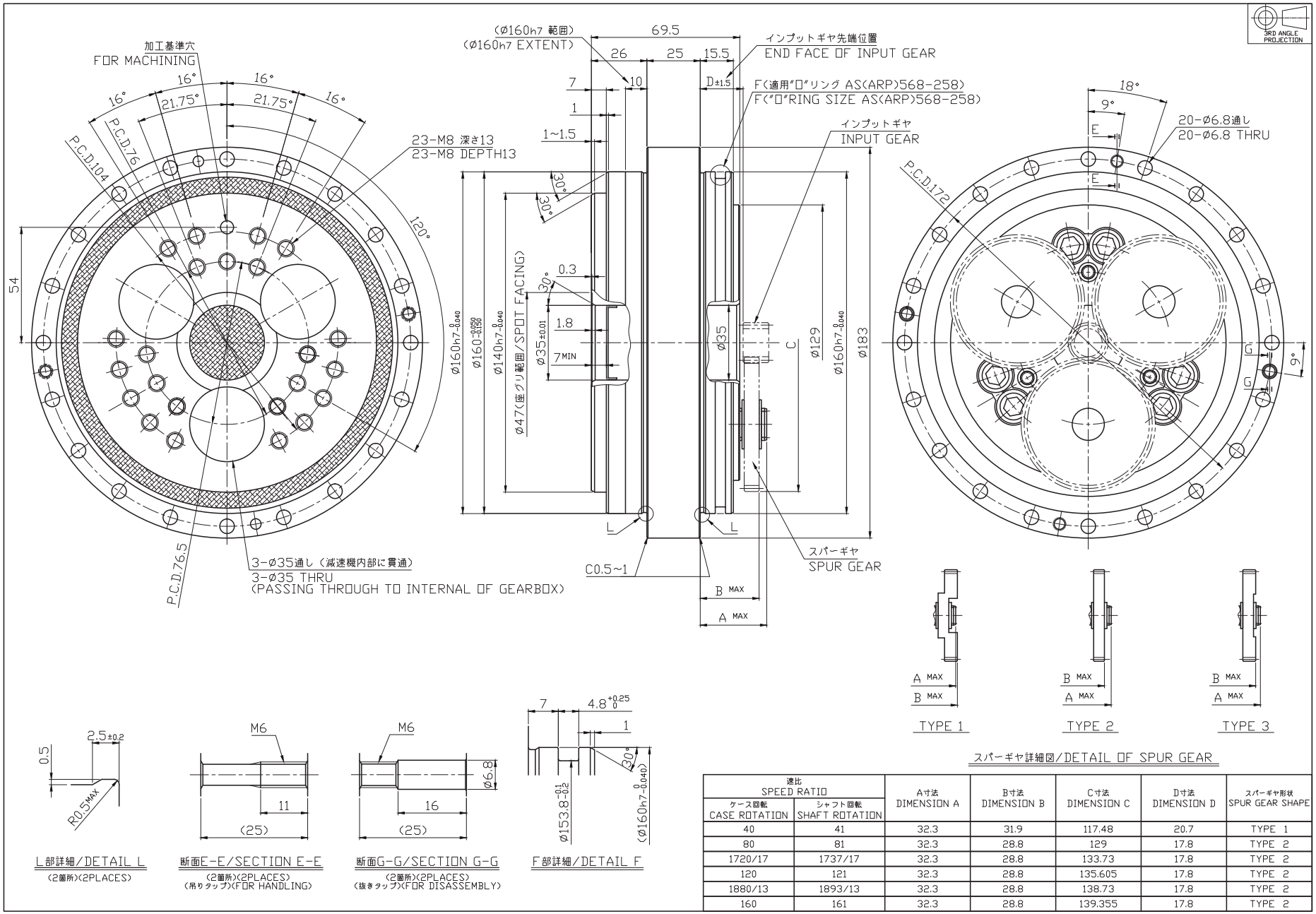

スパーギヤ詳細図/DETAIL OF SPUR GEAR

速比 SPEED RATIO		A寸法 DIMENSION A	B寸法 DIMENSION B	C寸法 DIMENSION C	D寸法 DIMENSION D	スパーギヤ形状 SPUR GEAR SHAPE
ケース回転 CASE ROTATION	シャフト回転 SHAFT ROTATION					
40	41	32.3	31.9	117.48	20.7	TYPE 1
80	81	32.3	28.8	129	17.8	TYPE 2
1720/17	1737/17	32.3	28.8	133.73	17.8	TYPE 2
120	121	32.3	28.8	135.605	17.8	TYPE 2
1880/13	1893/13	32.3	28.8	138.73	17.8	TYPE 2
160	161	32.3	28.8	139.355	17.8	TYPE 2

Specifications and dimensions are subject to change without notice.

Model : RV-80N

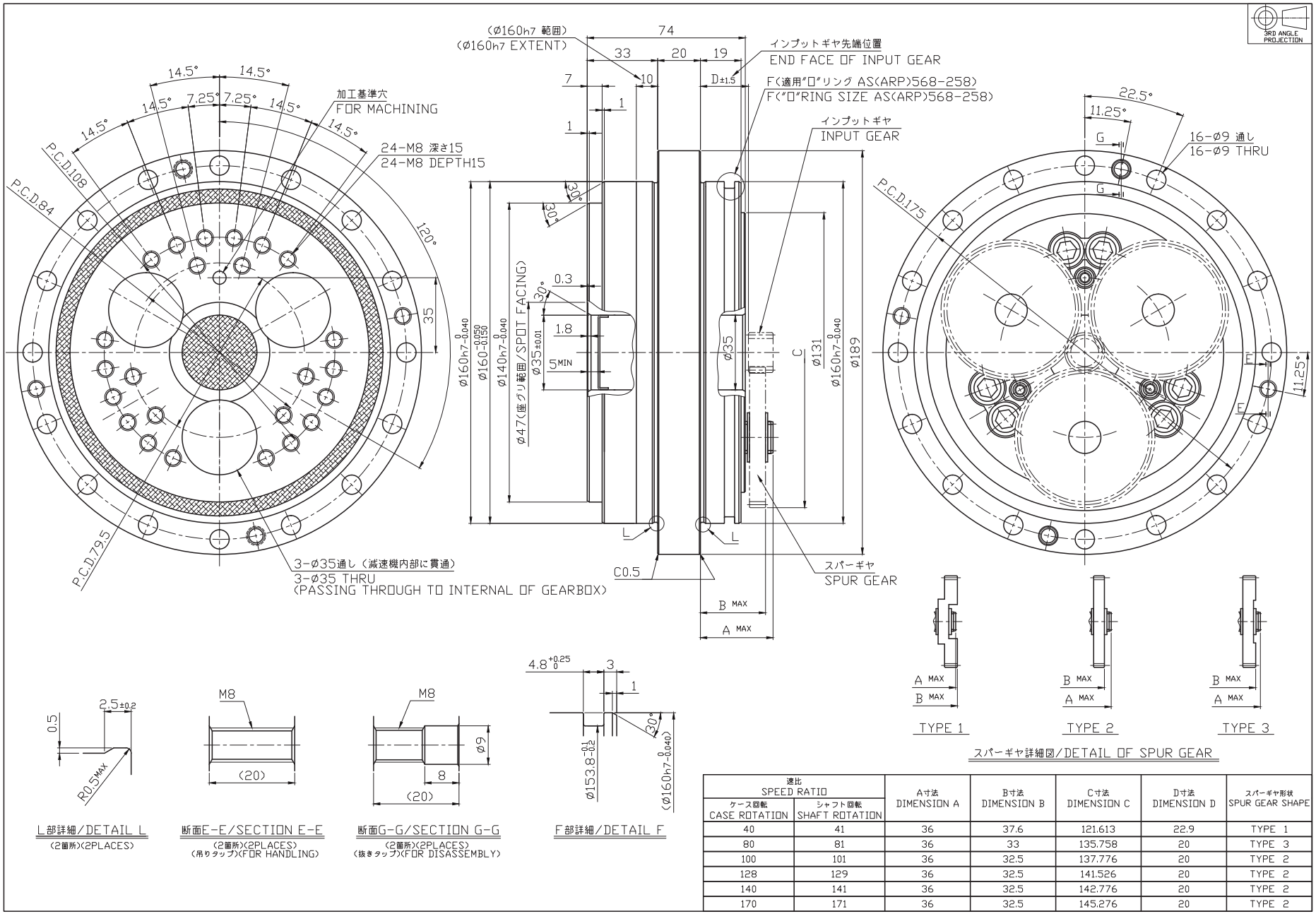

速比 SPEED RATIO		A寸法 DIMENSION A	B寸法 DIMENSION B	C寸法 DIMENSION C	D寸法 DIMENSION D	スパーギヤ形状 SPUR GEAR SHAPE
ケース回転 CASE ROTATION	シャフト回転 SHAFT ROTATION					
40	41	36	37.6	121.613	22.9	TYPE 1
80	81	36	33	135.758	20	TYPE 3
100	101	36	32.5	137.776	20	TYPE 2
128	129	36	32.5	141.526	20	TYPE 2
140	141	36	32.5	142.776	20	TYPE 2
170	171	36	32.5	145.276	20	TYPE 2

Specifications and dimensions are subject to change without notice.

Model : RV-100N

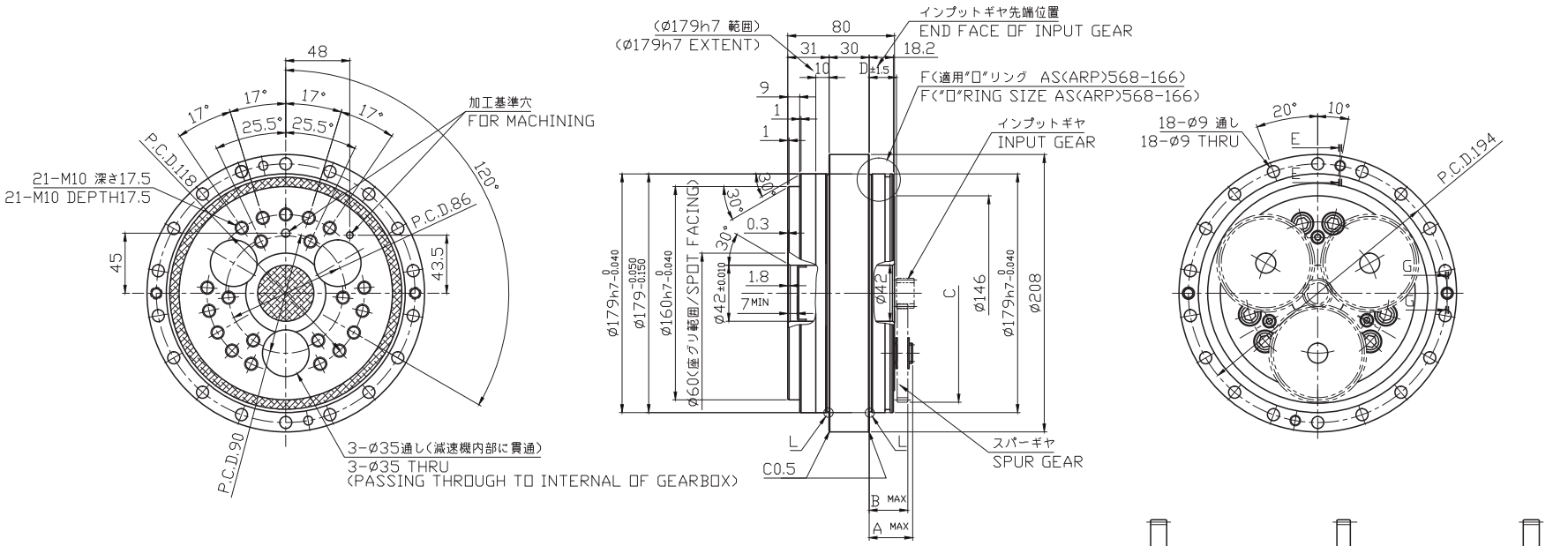

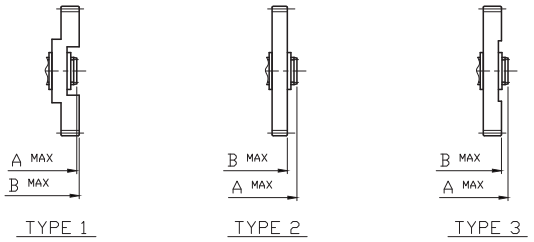

スパーギヤ詳細図/DETAIL OF SPUR GEAR

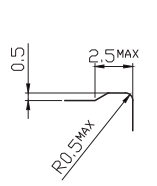

L部詳細/DETAIL L
(2箇所)/(2PLACES)

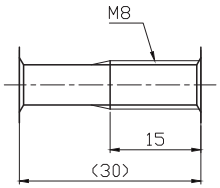

断面E-E/SECTION E-E
(2箇所)(2PLACES)
(吊りタップ)(FOR HANDLING)

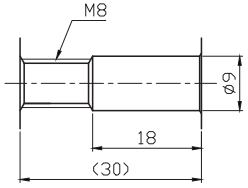

断面G-G/SECTION G-G
(2箇所)(2PLACES)
(抜きタップ)(FOR DISASSEMBLY)

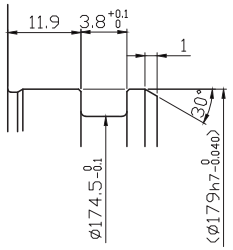

F部詳細/DETAIL F

速比 SPEED RATIO		A寸法 DIMENSION A	B寸法 DIMENSION B	C寸法 DIMENSION C	D寸法 DIMENSION D	スパーギヤ形状 SPUR GEAR SHAPE
ケース回転 CASE ROTATION	シャフト回転 SHAFT ROTATION					
40	41	34.6	36.9	136.5	21.2	TYPE 1
80	81	34.6	31	153	18.3	TYPE 2
1720/17	1737/17	34.6	31	156	18.3	TYPE 2
120	121	34.6	31	160.05	18.3	TYPE 2
140	141	34.6	31	161.25	18.3	TYPE 2
160	161	34.6	31	163.5	18.3	TYPE 2

Specifications and dimensions are subject to change without notice.

Model : RV-125N

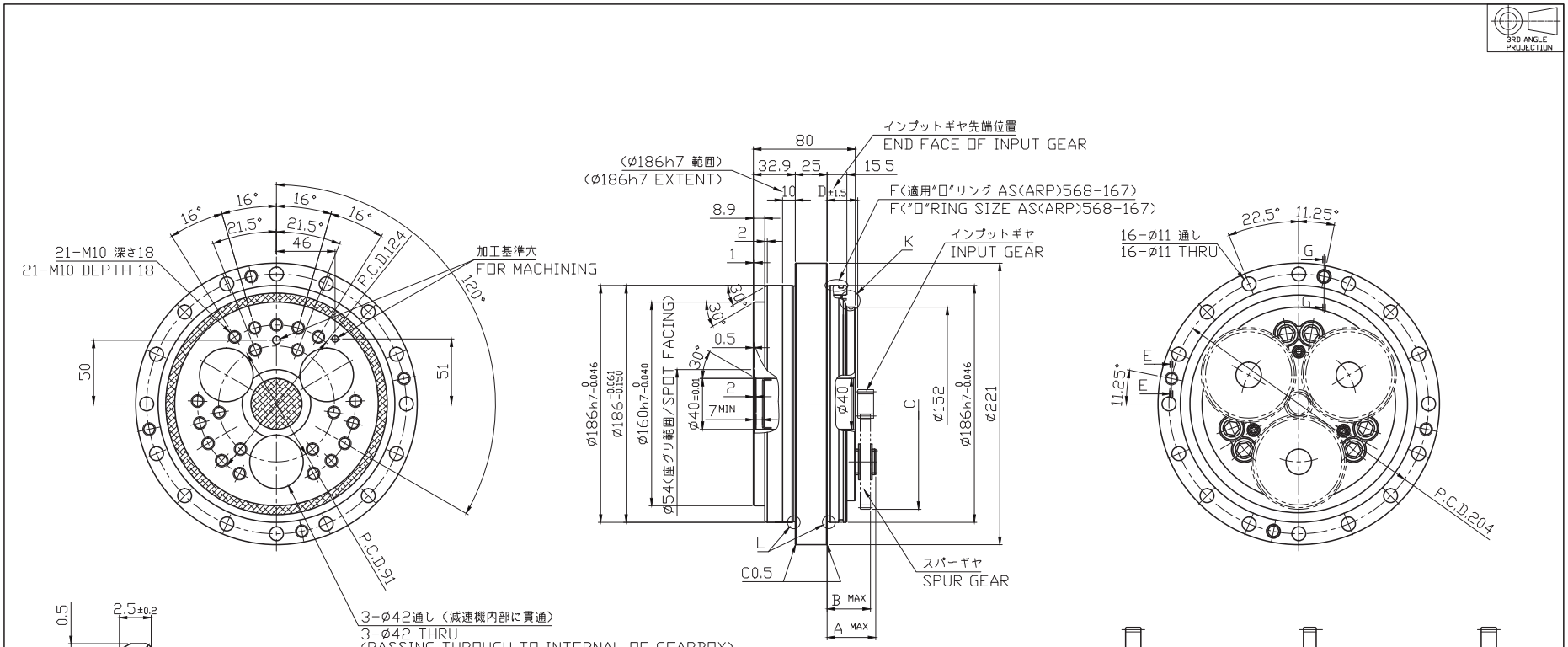

速比 SPEED RATIO		A寸法 DIMENSION A	B寸法 DIMENSION B	C寸法 DIMENSION C	D寸法 DIMENSION D	スパーギヤ形状 SPUR GEAR SHAPE
ケース回転 CASE ROTATION	シャフト回転 SHAFT ROTATION					
40	41	38.2	40.7	138.541	24.1	TYPE 1
80	81	38.2	34	153.541	21.2	TYPE 2
1720/17	1737/17	38.2	34	158.041	21.2	TYPE 2
120	121	38.2	34	161.041	21.2	TYPE 2
1880/13	1893/13	38.2	34	164.041	21.2	TYPE 2
160	161	38.2	34	165.541	21.2	TYPE 2

Specifications and dimensions are subject to change without notice.

Model : RV-160N

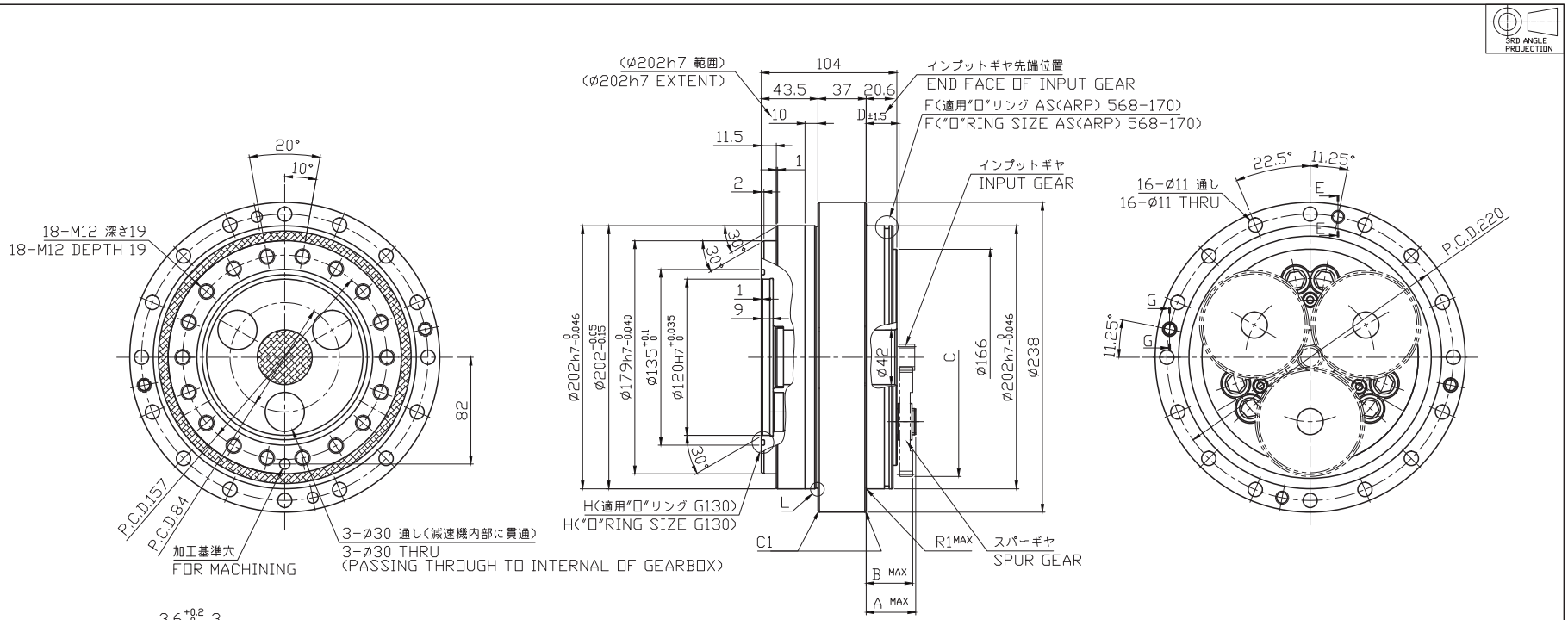

速比 SPEED RATIO		A寸法 DIMENSION A	B寸法 DIMENSION B	C寸法 DIMENSION C	D寸法 DIMENSION D	スパーギヤ形状 SPUR GEAR SHAPE
ケース回転 CASE ROTATION	シャフト回転 SHAFT ROTATION					
40	41	39.9	40.1	152.32	25.8	TYPE 1
80	81	39.9	37.6	167.317	22.9	TYPE 3
1120/11	1131/11	39.9	37.6	171.833	22.9	TYPE 3
2360/19	2379/19	39.9	37.6	175.583	22.9	TYPE 3
155	156	39.9	37.6	179.333	22.9	TYPE 3
200	201	39.9	38.6	183.083	22.9	TYPE 3

Specifications and dimensions are subject to change without notice.

Model : RV-380N

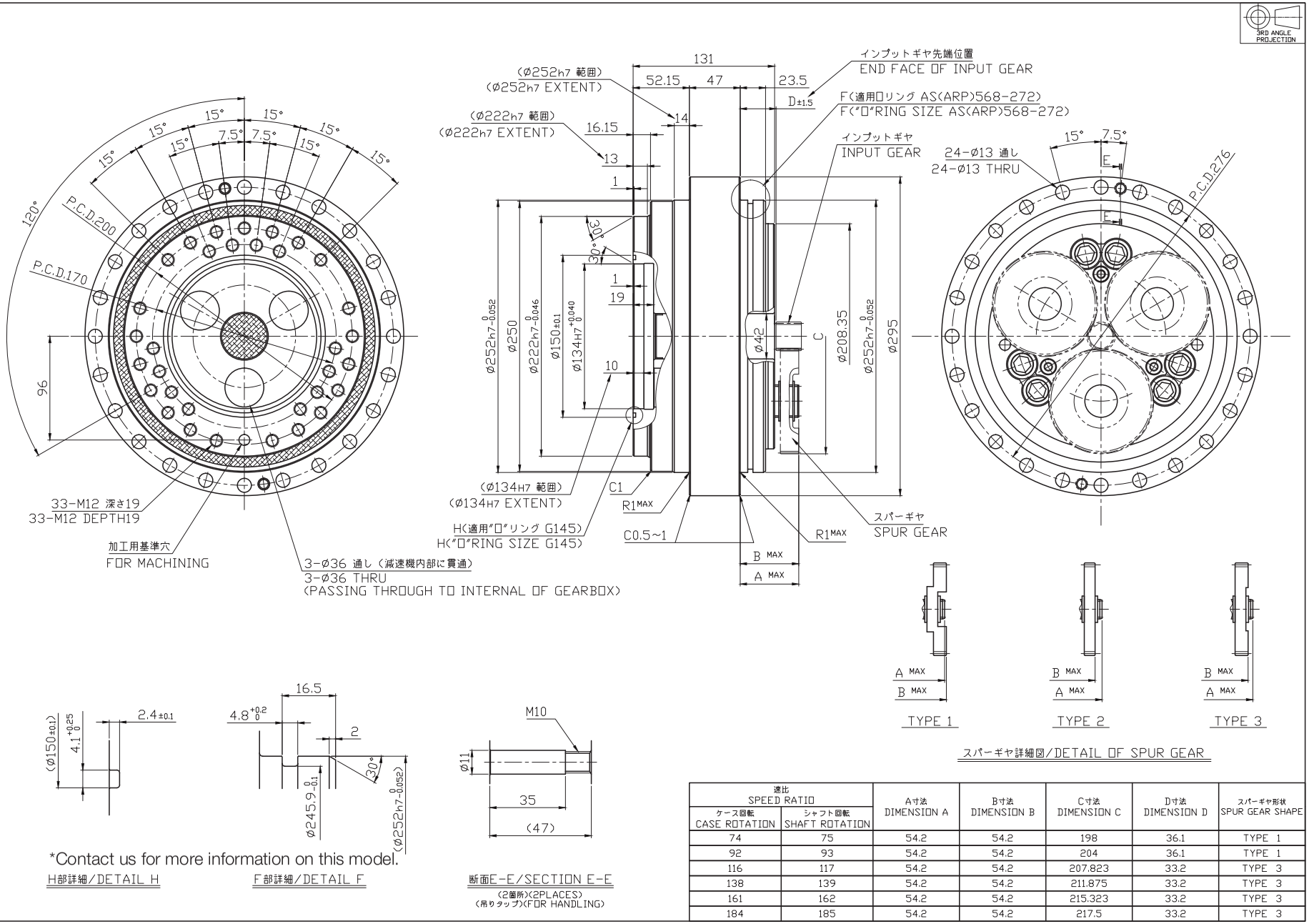

*Contact us for more information on this model.

速比 SPEED RATIO		A寸法 DIMENSION A	B寸法 DIMENSION B	C寸法 DIMENSION C	D寸法 DIMENSION D	スパーギヤ形状 SPUR GEAR SHAPE
ケース回転 CASE ROTATION	シャフト回転 SHAFT ROTATION					
74	75	54.2	54.2	198	36.1	TYPE 1
92	93	54.2	54.2	204	36.1	TYPE 1
116	117	54.2	54.2	207.823	33.2	TYPE 3
138	139	54.2	54.2	211.875	33.2	TYPE 3
161	162	54.2	54.2	215.323	33.2	TYPE 3
184	185	54.2	54.2	217.5	33.2	TYPE 3

Specifications and dimensions are subject to change without notice.

Model : RV-500N

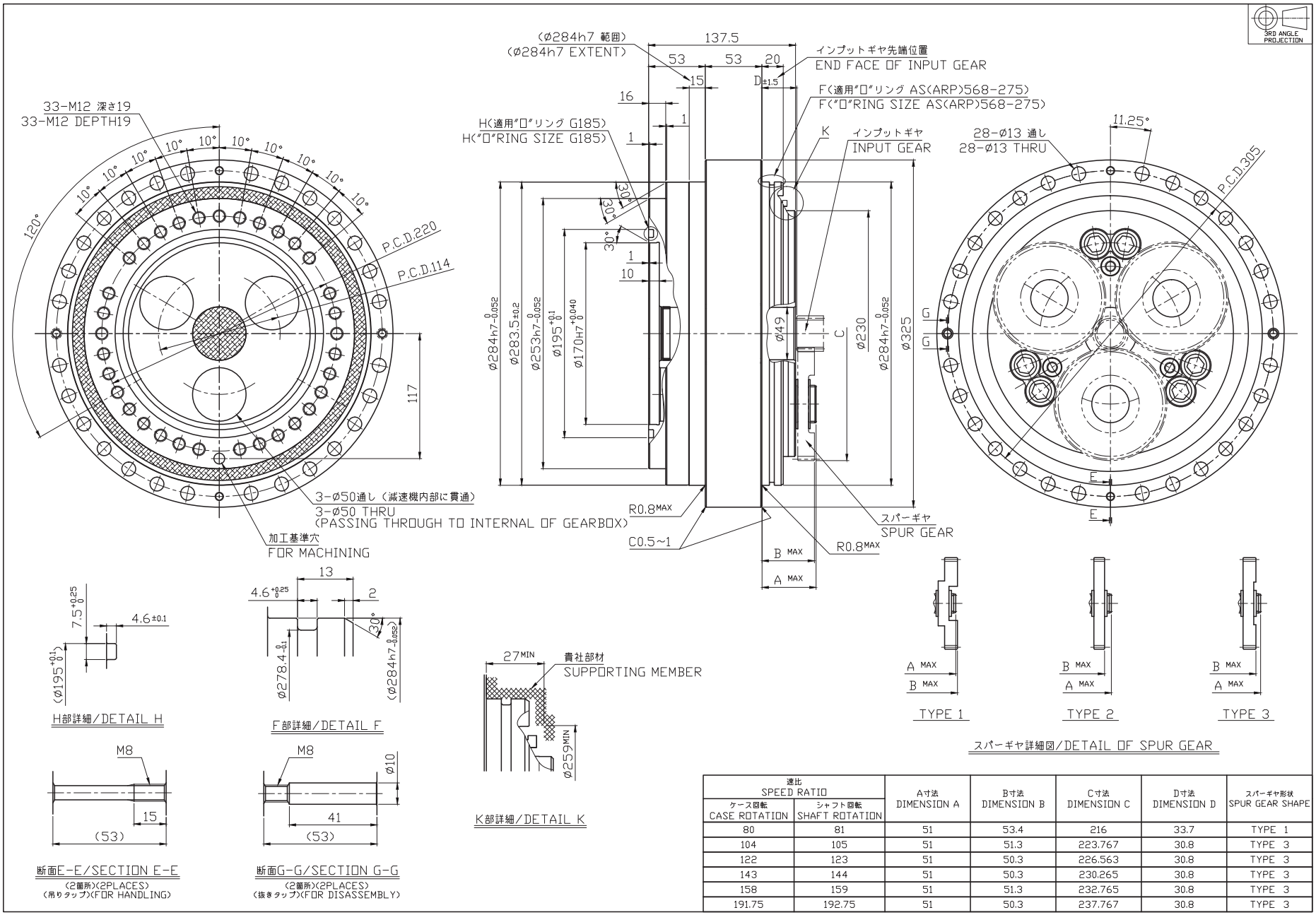

速比 SPEED RATIO		A寸法 DIMENSION A	B寸法 DIMENSION B	C寸法 DIMENSION C	D寸法 DIMENSION D	スパーギヤ形状 SPUR GEAR SHAPE
ケース回転 CASE ROTATION	シャフト回転 SHAFT ROTATION					
80	81	51	53.4	216	33.7	TYPE 1
104	105	51	51.3	223.767	30.8	TYPE 3
122	123	51	50.3	226.563	30.8	TYPE 3
143	144	51	50.3	230.265	30.8	TYPE 3
158	159	51	51.3	232.765	30.8	TYPE 3
191.75	192.75	51	50.3	237.767	30.8	TYPE 3

Specifications and dimensions are subject to change without notice.

Model : RV-700N

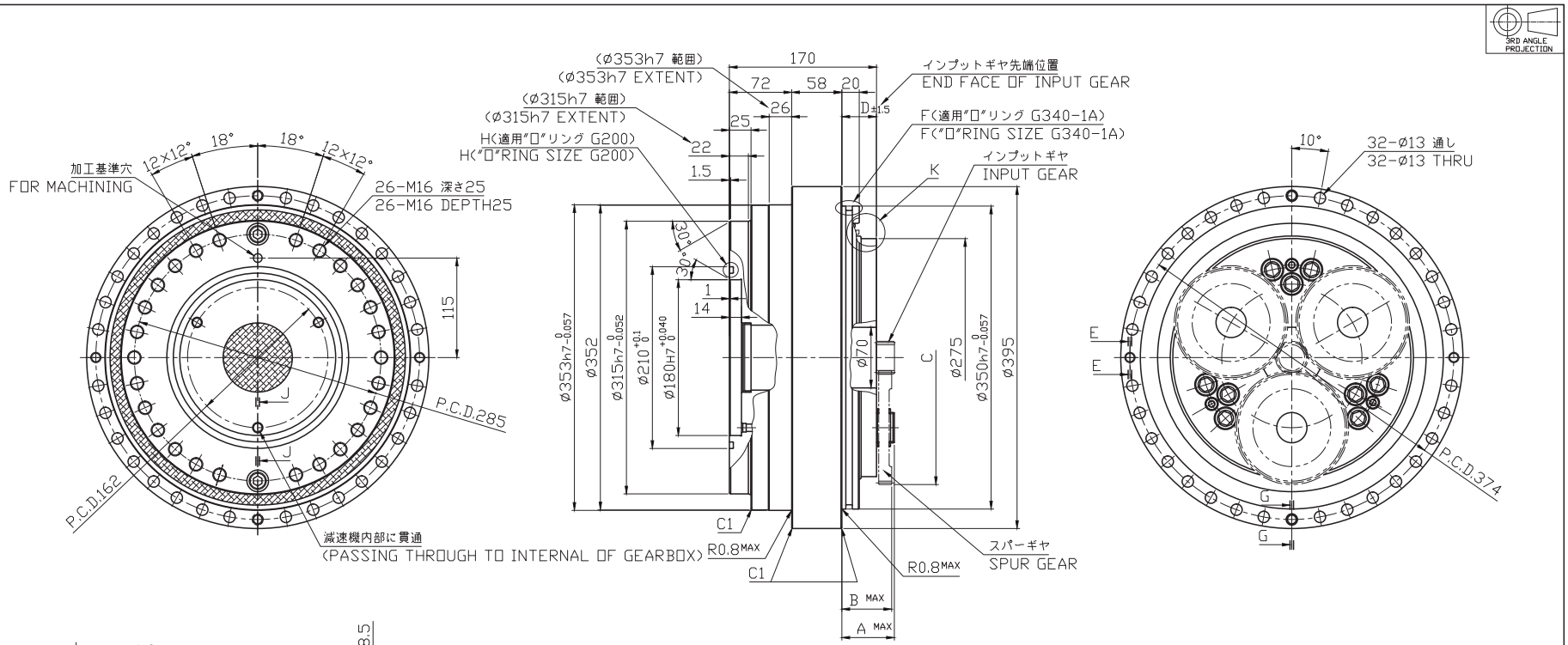

速比 SPEED RATIO		A寸法 DIMENSION A	B寸法 DIMENSION B	C寸法 DIMENSION C	D寸法 DIMENSION D	スパーギヤ形状 SPUR GEAR SHAPE
ケース回転 CASE ROTATION	シャフト回転 SHAFT ROTATION					
104	105	62.2	58.9	273	39.7	TYPE 3
117	118	62.2	58.9	277.387	39.7	TYPE 3
141.44	142.44	62.2	58.9	282.888	39.7	TYPE 3
158	159	62.2	58.9	285.972	39.7	TYPE 3
182	183	62.2	58.9	291.4	39.7	TYPE 3
3848/19	3867/19	62.2	58.9	293.388	39.7	TYPE 3

Specifications and dimensions are subject to change without notice.

Technical Information

Considering the use of the N series

This product features high precision and high rigidity, however, it is necessary to strictly comply with various restrictions and make appropriate to maximize the product's features. Please read this technical document thoroughly and select and adopt an appropriate model based on the actual operating environment, method, and conditions at your facility.

Export

- When this product is exported from Japan, it may be subject to the export regulations provided in the "Foreign Exchange Order and Export Trade Control Order". Be sure to take sufficient precautions and perform the required export procedures in advance if the final operating party is related to the military or the product is to be used in the manufacture of weapons, etc.

Application

- If failure or malfunction of the product may directly endanger human life or if it is used in units which may injure the human body (atomic facilities, space equipment, medical equipment, safety units, etc.), examination of individual situations is required. Contact our agent or nearest business office in such a case.

Safety measures

- Although this product has been manufactured under strict quality control, a mistake in operation or misuse can result in breakdown or damage, or an accident resulting in injury or death. Be sure to take all appropriate safety measures, such as the installation of independent safeguards.

Product specifications indicated in this catalog

- The specifications indicated in this catalog are based on Nabtesco evaluation methods. This product should only be used after confirming that it is appropriate for the operating conditions of your system.

Operating environment

Use the reduction gear under the following environment:

- Location where the ambient temperature is between -10°C to 40°C.
- Location where the humidity is less than 85% and no condensation occurs.
- Location where the altitude is less than 1000 m.
- Well-ventilated location

Do not install the reduction gear at the following locations.

- Location where a lot of dust is collected.
- Outdoors that can be directly affected by wind and rain
- Location near the environment that contains combustible, explosive, or corrosive gases and flammable materials.
- Location that is heated due to heat transfer and radiation from peripherals and direct sun.
- Location where the performance of the motor can be affected by magnetic fields or vibration.

Note 1: If the required operating environment cannot be established/met, contact us in advance.

2: When using the reduction gear under special conditions (clean room, equipment for food, concentrated alkali, high-pressure steam, etc.), contact our agent or nearest business office in advance.

Maintenance

- The standard replacement time for lubricant is 20,000 hours. However, when operation involves a reduction gear surface temperature above 40°C, the state of degradation of the lubricant should be checked in advance of that and the grease replaced earlier as necessary.

Reduction gear temperature

- When the reduction gear is used under high load and at a high duty ratio, it may overheat and the surface temperature may exceed the allowable temperature. Be aware of conditions so that the surface temperature of the reduction gear does not exceed 60°C while it is in operation. There is a possibility of damage (to the product) if the surface temperature exceeds 60°C.

Reduction gear output rotation angle

- When the range of the rotation angle is small (10 degrees or less), the service life of the reduction gear may be reduced due to poor lubrication or the internal parts being subject to a concentrated load.

  Note: Contact us in case the rotation angle is 10 degrees or less.

Manuals

- Safety information and detail product instructions are indicated in the operation manual.
  The operation manual can be downloaded from the following website.
  http://precision.nabtesco.com/

Glossary

Rating service life

The lifetime resulting from the operation with the rated torque and the rated output speed is referred to as the “rated service life”.

Allowable acceleration/deceleration torque

When the machine starts or stops, the load torque to be applied to the reduction gear is larger than the constant-speed load torque due to the effect of the inertia torque of the rotating part.

In such a situation, the allowable torque during acceleration/deceleration is referred to as “allowable acceleration/deceleration torque”.

Note: Be careful that the load torque, which is applied at startup and stop, does not exceed the allowable acceleration/deceleration torque.

Momentary maximum allowable torque

A large torque may be applied to the reduction gear due to execution of emergency stop or by an external shock. In such a situation, the allowable value of the momentary applied torque is referred to as “momentary maximum allowable torque”.

Note: Be careful that the momentary excessive torque does not exceed the momentary maximum allowable torque.

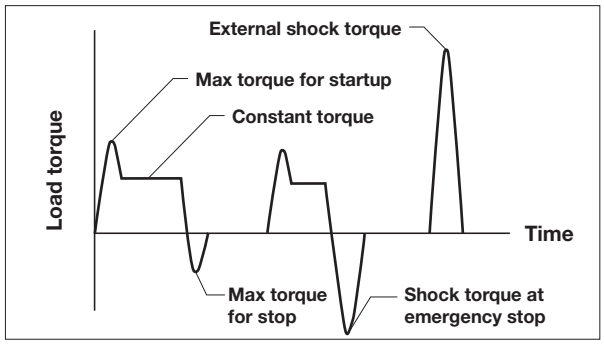

Allowable output speed

The allowable value for the reduction gear’s output speed during operation without a load is referred to as the “allowable output speed”.

Notes: Depending on the conditions of use (duty ratio, load, ambient temperature), the reduction gear temperature may exceed 60°C even when the speed is under the allowable output speed. In such a case, either take cooling measures or use the reduction gear at a speed that keeps the surface temperature at 60°C or lower.

Duty ratio

The duty ratio is defined as the ratio of the sum total time of acceleration, constant, and deceleration to the cycle time of the reduction gear.

Torsional rigidity, lost motion, backlash

When a torque is applied to the output shaft while the input shaft is fixed, torsion is generated according to the torque value. The torsion can be shown in the hysteresis curves.

The value of b/a is referred to as “torsional rigidity”.

The torsion angle at the mid point of the hysteresis curve width within ±3% of the rated torque is referred to as “lost motion”.

The torsion angle when the torque indicated by the hysteresis curve is equal to zero is referred to as “backlash”.

<Hysteresis curve>

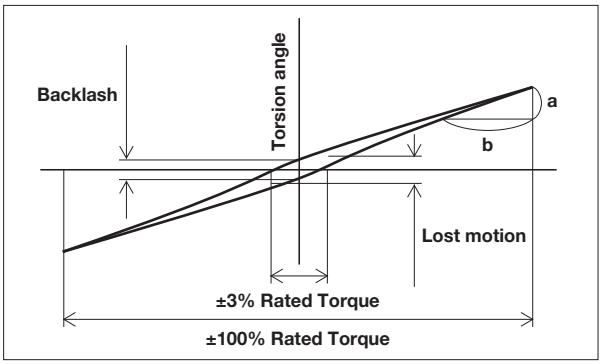

Startup Efficiency

The efficiency of the moment when the reduction gear starts up is referred to as “startup efficiency”.

No-load running torque (input shaft)

The torque for the input shaft that is required to run the reduction gear without load is referred to as “no-load running torque”.

Allowable Moment and Maximum Thrust Load

The external load moment may be applied to the reduction gear during normal operation. The allowable values of the external moment and the external axial load at this time are each referred to as “allowable moment” and “maximum thrust load”.

Angular transmission error

The angular transmission error is defined as the difference between the theoretical output angle of rotation (when there are input instructions for an arbitrary rotation angle) and the actual output angle of rotation.

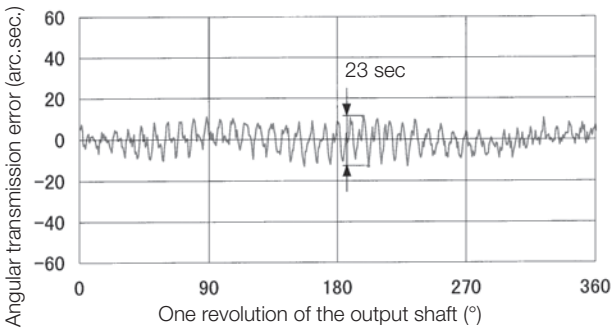

Product selection flowchart

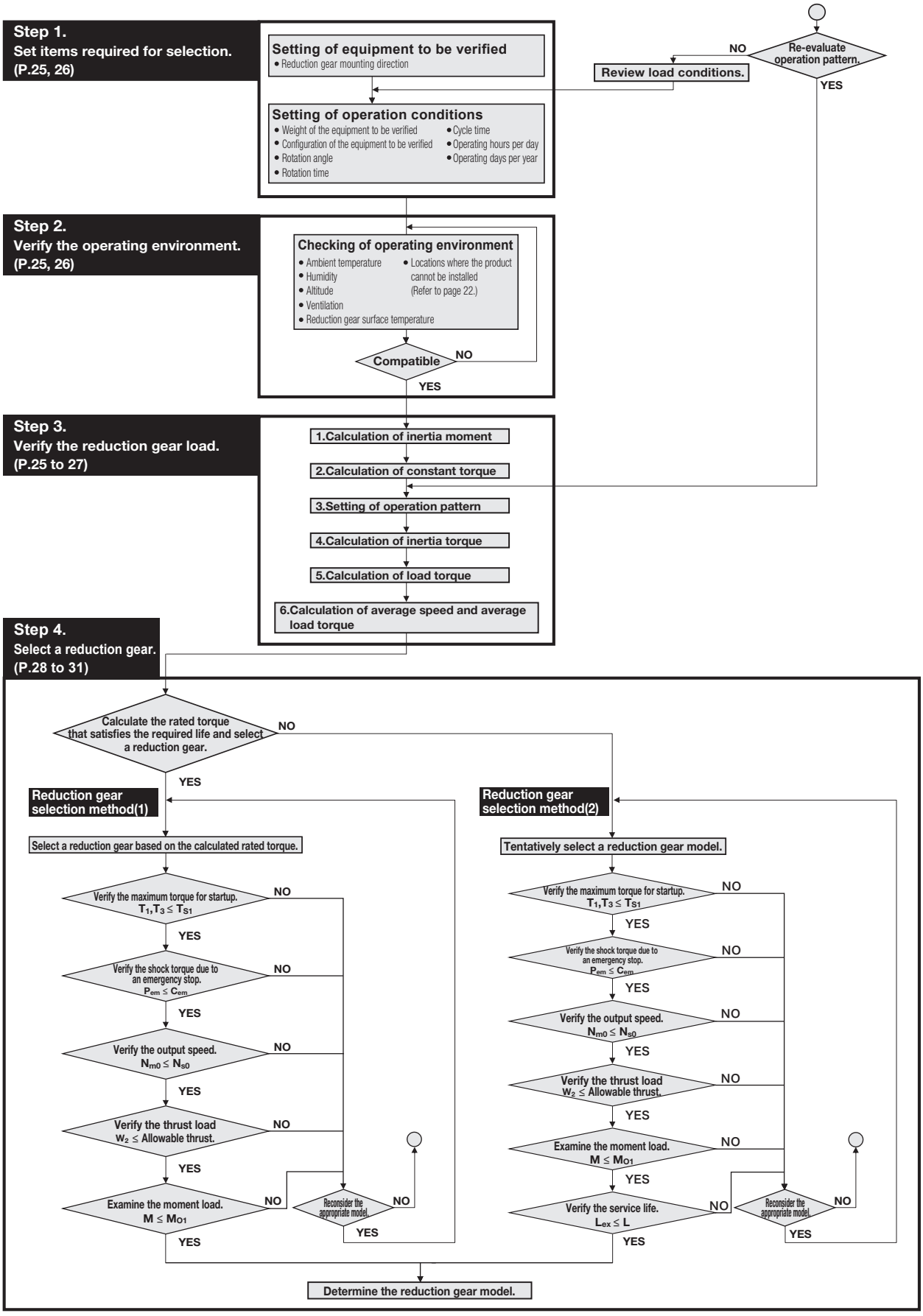

A limitation is imposed on the motor torque value according to the momentary maximum allowable torque of the selected reduction gear. (Refer to page 32)

Model code selection examples

With horizontal rotational transfer

Step 1. Set the items required for selection.

Setting item	Setting
Reduction gear mounting direction	Vertical shaft installation
Equipment weight to be considered	
W_A ——— Disk weight (kg)	180
W_B ——— Work weight (kg)	20×4 pieces
Equipment configuration to be considered	
D_1 ——— Disk: D dimension (mm)	1,200
a ——— Work piece: a dimension (mm)	100
b ——— Work piece: b dimension (mm)	300
D_2 ——— Work piece: P.C.D. (mm)	1,000
Operation conditions	
θ ——— Rotation angle (°)*1	180
$[t_1+t_2+t_3]$ —— Rotation time (s)	2.5
$[t_4]$ ——— Cycle time (s)	20
Q_1 ——— Equipment operation hours per day (hours/day)	12
Q_2 ——— Equipment operation days per year (days/year)	365

*1. When the range of the rotation angle is small (10 degrees or less), the rating life of the reduction gear may be reduced due to poor lubrication or the internal parts being subject to a concentrated load.

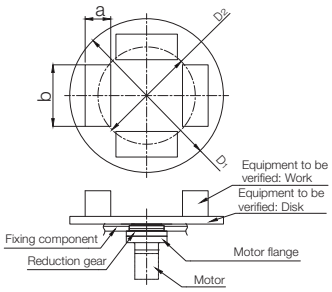

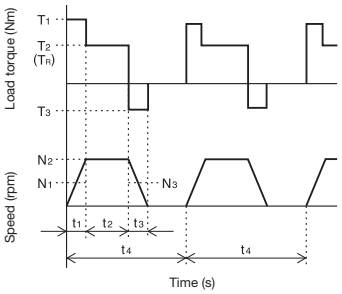

Step 2. Verify the operating environment.

Checkpoint	Standard value
S_0 ——— Ambient temperature (°C)	-10 to +40
S_1 ——— Reduction gear surface temperature (°C)	60 or less

Note: Refer to "Operating environment" on p. 22 for values other than those listed above.

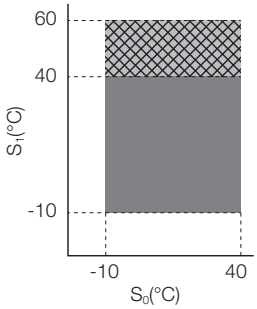

Step 3-1. Examine the reduction gear load

Setting item		Calculation formula	Selection examples
(1) Calculate the inertia moment based the calculation formula on page 52.			
I_R	Load inertia moment (kgm^2)	$I_{R1}=\frac{W_A\times\left(\frac{D_1}{2\times1{,}000}\right)^2}{2}$ $I_{R2}=\left[\frac{W_B}{12}\left\{\left(\frac{a}{1{,}000}\right)^2+\left(\frac{b}{1{,}000}\right)^2\right\}+W_B\times\left(\frac{D_2}{2\times1{,}000}\right)^2\right]\times n$ I_{R1} = Disk inertia moment I_{R2} = Work inertia $I_R = I_{R1} + I_{R2}$ n = Number of work pieces	$I_{R1}=\frac{180\times\left(\frac{1{,}200}{2\times1{,}000}\right)^2}{2}$ $=32.4\ (kgm^2)$ $I_{R2}=\left[\frac{20}{12}\left\{\left(\frac{100}{1{,}000}\right)^2+\left(\frac{300}{1{,}000}\right)^2\right\}+20\times\left(\frac{1{,}000}{2\times1{,}000}\right)^2\right]\times4$ $=20.7\ (kgm^2)$ $I_R = 32.4 + 20.7$ $=53.1\ (kgm^2)$
(2) Examine the constant torque.			
T_R	Constant torque (Nm)	$T_R=(W_A+W_B)\times9.8\times\frac{D_{in}}{2\times1{,}000}\times\mu$ μ = Friction factor Note: Use 0.015 for this example as the load is applied to the bearing of the RD2 precision reduction gear. D_{in} = Rolling diameter: Use the pilot diameter which is almost equivalent to the rolling diameter in this selection calculation. Note: If the reduction gear model is not determined, select the following pilot diameter: Maximum pilot diameter: 353 (mm) (RV-700N)	$T_R=(180+20\times4)\times9.8\times\frac{353}{2\times1{,}000}\times0.015$ $=6.7(Nm)$

Step 3-2: Proceed to p. 27.

With vertical rotational transfer

Step 1. Set the items required for selection.

Setting item	Setting
Reduction gear mounting direction	Horizontal shaft installation
Equipment weight to be considered	
W_C ——— Mounted work weight (kg)	490
Equipment configuration to be considered	
a ——— a dimension (mm)	500
b ——— b dimension (mm)	500
R ——— R dimension (mm)	320
Operation conditions	
θ ——— Rotation angle (°)*1	90
$[t_1+t_2+t_3]$ ——— Rotation time (s)	1.5
$[t_4]$ ——— Cycle time (s)	20
Q_1 ——— Equipment operation hours per day (hours/day)	24
Q_2 ——— Equipment operation days per year (days/year)	365

*1. When the range of the rotation angle is small (10 degrees or less), the rating life of the reduction gear may be reduced due to poor lubrication or the internal parts being subject to a concentrated load.

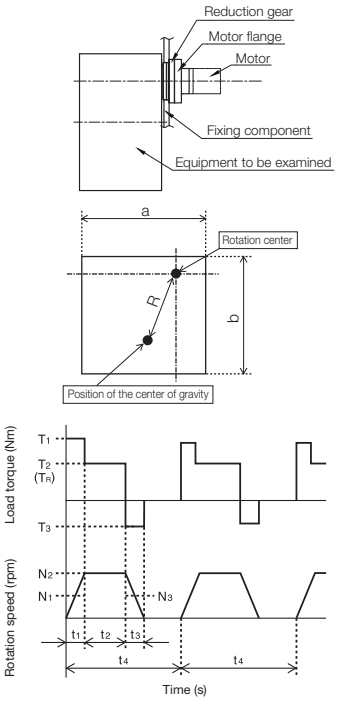

Step 2. Verify the operating environment.

Checkpoint	Standard value
S_0 ——— Ambient temperature (°C)	-10 to +40
S_1 ——— Reduction gear surface temperature (°C)	60 or less

Note: Refer to "Operating environment" on p. 22 for values other than those listed above.

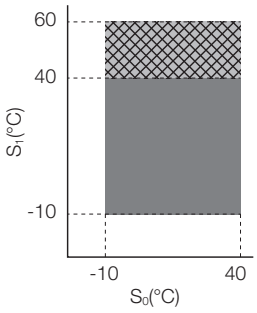

Step 3-1. Examine the reduction gear load

Setting item		Calculation formula	Selection examples
(1) Calculate the inertia moment based the calculation formula on page 52.			
I_R	Load inertia moment (kgm^2)	$I_R=\frac{W_C}{12}\times\left\{\left(\frac{a}{1{,}000}\right)^2+\left(\frac{b}{1{,}000}\right)^2\right\}+W_C\times\left(\frac{R}{1{,}000}\right)^2$	$I_R=\frac{490}{12}\times\left\{\left(\frac{500}{1{,}000}\right)^2+\left(\frac{500}{1{,}000}\right)^2\right\}+490\times\left(\frac{320}{1{,}000}\right)^2$ $=70.6\,(kgm^2)$
(2) Examine the constant torque.			
T_R	Constant torque (Nm)	$T_R=W_C\times9.8\times\frac{R}{1{,}000}$	$T_R=490\times9.8\times\frac{320}{1{,}000}$ $=1{,}537\,(Nm)$

Step 3-2: Proceed to p. 27.
(Refer to "With horizontal rotational transfer" for selection examples.)

Step 3-2. Set items required for selection

Setting item	Calculation formula	Selection examples (With horizontal rotational transfer)
(3) Set the acceleration/deceleration time, constant-speed operation time, and output speed.		
t_1 ——— Acceleration time (s) t_2 ——— Constant-speed operation time (s) t_3 ——— Deceleration time (s) N_2 ——— Constant speed (rpm)	• The operation pattern does not need to be verified if it is already set. • If the operation pattern has not been determined, use the following formula to calculate the reference operation pattern. $t_1 = t_3 = \text{Rotation}\ [\,t_1 + t_2 + t_3\,] - \dfrac{\theta}{\left(\dfrac{N_2}{60} \times 360\right)}$ $t_2 = \text{Rotation}\ [\,t_1 + t_2 + t_3\,] - (t_1 + t_3)$ Note: 1. Assume that t_1 and t_3 are the same. Note: 2. N_2 = 15 rpm if the reduction gear output speed (N_2) is not known. Note: 3. If t_1 and t_3 is less than 0, increase the output speed or extend the rotation time.	Examine the operation pattern using N_2 = 15 rpm as the reduction gear output speed is unknown. $t_1 = t_3 = 2.5 - \dfrac{180}{\left(\dfrac{15}{60} \times 360\right)} = 0.5\,(\text{s})$ $t_2 = 2.5 - (0.5 + 0.5) = 1.5\,(\text{s})$ $\therefore\ t_1 = t_3 = 0.5\,(\text{s})$ $t_2 = 1.5\,(\text{s})$ $N_2 = 15\ (\text{rpm})$
N_1 ——— Average speed for startup (rpm)	$N_1 = \dfrac{N_2}{2}$	$N_1 = \dfrac{15}{2} = 7.5\,(\text{rpm})$
N_3 ——— Average speed for stop (rpm)	$N_3 = \dfrac{N_2}{2}$	$N_3 = \dfrac{15}{2} = 7.5\ (\text{rpm})$
(4) Calculate the inertia torque for acceleration/deceleration.		
T_A ——— Inertia torque for acceleration (Nm)	$T_A = \left\{\dfrac{I_R \times (N_2 - 0)}{t_1}\right\} \times \dfrac{2\pi}{60}$	$T_A = \left\{\dfrac{53.1 \times (15 - 0)}{0.5}\right\} \times \dfrac{2\pi}{60}$ $= 166.8\ (\text{Nm})$
T_D ——— Inertia torque for deceleration (Nm)	$T_D = \left\{\dfrac{I_R \times (0 - N_2)}{t_3}\right\} \times \dfrac{2\pi}{60}$	$T_D = \left\{\dfrac{53.1 \times (0 - 15)}{0.5}\right\} \times \dfrac{2\pi}{60}$ $= -166.8\ (\text{Nm})$
(5) Calculate the load torque for acceleration/deceleration.		
T_1 ——— Maximum torque for startup (Nm)	$T_1 = \lvert T_A + T_R \rvert$ T_R: Constant torque With horizontal rotational transfer Refer to page 25 With vertical rotational transfer Refer to page 26	$T_1 = \lvert 166.8 + 6.7 \rvert$ $= 173.5\,(\text{Nm})$
T_2 ——— Constant maximum torque (Nm)	$T_2 = \lvert T_R \rvert$	$T_2 = 6.7\,(\text{Nm})$
T_3 ——— Maximum torque for stop (Nm)	$T_1 = \lvert T_A + T_R \rvert$ T_R: Constant torque With horizontal rotational transfer Refer to page 25 With vertical rotational transfer Refer to page 26	$T_3 = \lvert -166.8 + 6.7 \rvert$ $= 160.1\,(\text{Nm})$
(6)-1 Calculate the average speed.		
N_m ——— Average speed (rpm)	$N_m = \dfrac{t_1 \times N_1 + t_2 \times N_2 + t_3 \times N_3}{t_1 + t_2 + t_3}$	$N_m = \dfrac{0.5 \times 7.5 + 1.5 \times 15 + 0.5 \times 7.5}{0.5 + 1.5 + 0.5}$ $= 12\,(\text{rpm})$
(6)-2 Calculate the average load torque.		
T_m ——— Average load torque (Nm)	$T_m = \sqrt[10/3]{\dfrac{t_1 \times N_1 \times T_1^{10/3} + t_2 \times N_2 \times T_2^{10/3} + t_3 \times N_3 \times T_3^{10/3}}{t_1 \times N_1 + t_2 \times N_2 + t_3 \times N_3}}$	$T_m = \sqrt[10/3]{\dfrac{0.5 \times 7.5 \times 173.5^{10/3} + 1.5 \times 15 \times 6.7^{10/3} + 0.5 \times 7.5 \times 160.1^{10/3}}{0.5 \times 7.5 + 1.5 \times 15 + 0.5 \times 7.5}}$ $= 110.3\ (\text{Nm})$

Go to page 28 if the reduction gear model is verified based on the required life.
Go to page 30 if the service life is verified based on the reduction gear model.

Step 4. Select a reduction gear

Reduction gear selection method (1) Calculate the required torque based on the load conditions and required life and select a reduction gear.

Setting/verification item	Calculation formula	Selection examples (With horizontal rotational transfer)
(1) Calculate the rated torque for the reduction gear that satisfies the required life.		
L_{ex} ——— Required life (year)	Based on the operation conditions	5 years
Q_{1cy} ——— Number of cycles per day (times)	$Q_{1cy}=\frac{Q_1\times60\times60}{t_4}$	$Q_{1cy}=\frac{12\times60\times60}{20}$ $=2,160\,(\text{times})$
Q_3 ——— Operating hours of reduction gear per day (h)	$Q_3=\frac{Q_{1cy}\times(t_1+t_2+t_3)}{60\times60}$	$Q_3=\frac{2,160\times(0.5+1.5+0.5)}{60\times60}$ $=1.5\,(\text{h})$
Q_4 ——— Operating hours of reduction gear per year (h)	$Q_4=Q_3\times Q_2$	$Q_4=1.5\times365$ $=548\,(\text{h})$
L_{hour} ——— Reduction gear service life (h)	$L_{hour}=Q_4\times L_{ex}$	$L_{hour}=548\times5$ $=2,740\,(\text{h})$
T_O' ——— Reduction gear rated torque that satisfies the required life (Nm)	$T_0'=T_m\times\sqrt[(\frac{10}{3})]{\frac{L_{hour}}{K}\times\frac{N_m}{N_0}}$ K : Reduction gear rated life (h) N_0 : Reduction gear rated output speed (rpm)	$T_0'=110.3\times\sqrt[(\frac{10}{3})]{\frac{2,740}{6,000}\times\frac{12}{15}}$ $=81.5\,(\text{Nm})$
(2) Tentatively select a reduction gear model based on the calculated rated torque.		
Tentative selection of the reduction gear	Select a reduction gear for which the rated torque of the reduction gear [T_0]*1 is equal to or greater than the rated torque of the reduction gear that satisfies the required life [T_0']. *1 [T_0]: Refer to the rating table on page 9	RV-25N that meets the following condition is tentatively selected: [T_0] 245 (Nm) ≥ [T_0'] 81.5 (Nm)
(3) Verify the maximum torque for startup and stop.		
Verification of maximum torque for startup and stop	Check the following conditions: The allowable acceleration/deceleration torque [T_{s1}]*1 is equal to or greater than the maximum starting torque [T_1]*2 and maximum stopping torque [T_3]*2 If the tentatively selected reduction gear is outside of the specifications, change the reduction gear model. *1 [T_{s1}]: Refer to the rating table on page 9 *2 [T_1] and [T_3]: Refer to page 27	[T_{s1}] 613 (Nm) ≥ [T_1] 173.5 (Nm) [T_3] 160.1 (Nm) According to the above conditions, the tentatively selected model should be no problem.
(4) Verify the output speed.		
N_{m0} ——— Average speed per cycle (rpm)	$N_{m0}=\frac{t_1\times N_1+t_2\times N_2+t_3\times N_3}{t_4}$	$N_{m0}=\frac{0.5\times7.5+1.5\times15+0.5\times7.5}{20}$ $=1.5\,(\text{rpm})$
Verification of output speed	Check the following condition: The allowable output speed (100% duty ratio) [N_{s0}]*1 is equal to or greater than the average speed per cycle [N_{m0}] If the tentatively selected reduction gear is outside of the specifications, change the reduction gear model. Contact us regarding use of the model at a speed outside the allowable output speed (40% duty ratio) [N_{S1}]*1. Note: The value of [N_{S0}] is the speed at which the case temperature is balanced at 60ºC for 30 minutes. *1 [N_{S0}] and [N_{S1}]: Refer to the rating table on page 9	[N_{s0}] 57 (rpm) ≥ [N_{m0}] 1.5 (rpm) According to the above condition, the tentatively selected model should be no problem.

Reduction gear selection method (1) Calculate the required torque based on the load conditions and required life and select a reduction gear.

Setting/verification item	Calculation formula	Selection examples (With horizontal rotational transfer)
(5) Verify the shock torque at the time of an emergency stop.		
P_{em} ——— Expected number of emergency stop times (times)	Based on the operation conditions.	For example, an emergency stop occurs once a month. [P_{em}] = 1 x 12 x required life (year) [L_{ex}] = 12 x 5 = 60 (times)
T_{em} ——— Shock torque due to an emergency stop (Nm)	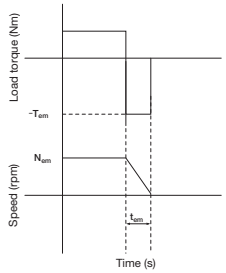 Shock torque due to an emergency stop [T_{em}] Set the operation conditions that meet the following requirement: Shock torque due to an emergency stop [T_{em}] is equal to or less than the momentary maximum allowable torque [T_{S2}]	For example, [T_{em}] = 500 (Nm)
N_{em} ——— Speed at the time of an emergency stop (rpm)		For example, [N_{em}] = 15 (rpm)
t_{em} ——— Deceleration time at the time of an emergency stop (s)		For example, [t_{em}] = 0.05 (s)
Z_4 ——— Number of pins for reduction gear	<table><tr><th>Model</th><th>Number of pins (Z_4)</th><th>Model</th><th>Number of pins (Z_4)</th></tr><tr><td>RV-25N</td><td rowspan="5">40</td><td>RV-125N</td><td rowspan="2">40</td></tr><tr><td>RV-42N</td><td>RV-160N</td></tr><tr><td>RV-60N</td><td>RV-380N</td><td>46</td></tr><tr><td>RV-80N</td><td>RV-500N</td><td rowspan="2">52</td></tr><tr><td>RV-100N</td><td>RV-700N</td></tr></table>	Number of pins for RV-25N: 40
C_{em} ——— Allowable number of shock torque application times	$C_{em} = \dfrac{775 \times \left(\dfrac{T_{S2}}{T_{em}}\right)^{\frac{10}{3}}}{Z_4 \times \dfrac{N_{em}}{60} \times t_{em}}$ Note [T_{S2}]: Momentary maximum allowable torque, refer to the rating table on page 9	$C_{em} = \dfrac{775 \times \left(\dfrac{1,225}{500}\right)^{\frac{10}{3}}}{40 \times \dfrac{15}{60} \times 0.05}$ = 30,729 (times)
Verification of shock torque due to an emergency stop	Check the following condition: The allowable shock torque application count [C_{em}] is equal to or greater than the expected emergency stop count [P_{em}] If the tentatively selected reduction gear is outside of the specifications, change the reduction gear model.	[C_{em}] 30,729 ≥ [P_{em}] 60 According to the above condition, the tentatively selected model should be no problem.
(6) Verify the thrust load and moment load.		
W_1 ——— R adial load (N)	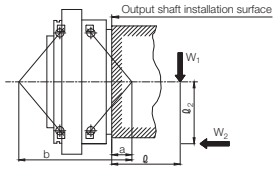 $M = \dfrac{W_1 \times (\ell + b - a) + W_2 \times \ell_2}{1,000}$ a,b: Refer to the calculation of the tilt angle on page 38.	0 (N)
ℓ ——— Distance to the point of radial load application (mm)		0 (mm)
W_2 ——— Thrust load (N)		In this example, $W_2 = W_A + W_B = (180 + 20 \times 4) \times 9.8$ = 2,548 (N) Note W_A, W_B : Refer to page 25.
ℓ_2 ——— Distance to the point of thrust load application (mm)		0 (mm) (As the workpiece center is located on the rotation axis)
M ——— Moment load (Nm)		RV-25N As dimension a = 22.1 (mm) and dimension b = 112.4 (mm): $M = \dfrac{0 \times (0 + 112.4 - 22.1) + 2,548 \times 0}{1,000}$ = 0 (Nm)
Verify the thrust load and moment load	Check that the thrust load and moment load are within the range in the allowable moment diagram on page 33. When radial load W_1 is applied within dimension b, use the reduction gear within the allowable radial load. Wr: Allowable radial load, see the rating table on page 9. If the tentatively selected reduction gear is outside of the specifications, change the reduction gear model.	For this example, Thrust load [W_2] = 2,548 (N) Moment load [M] = 0 (N) As the above values are within the range in the allowable moment diagram, the tentatively selected model should be no problem.
Select the reduction gear model that satisfies all the conditions of the above verification items. The actual reduction ratio is determined based on the motor speed, input torque, and inertia moment. Check with the motor manufacturer.		Based on the above verification result, RV-25N is selected.

Reduction gear selection method (2): Tentatively select a reduction gear model and evaluate the service life.

Setting/verification item	Calculation formula	Selection examples (With horizontal rotational transfer)
(1) Tentatively select a desired reduction gear model.		
Tentative selection of a reduction gear	Tentatively select a desired reduction gear model.	For example, tentatively select RV-25N.
(2) Verify the maximum torque for startup and stop.		
Verification of maximum torque for startup and stop	Check the following conditions: The allowable acceleration/deceleration torque [T_{s1}]*1 is equal to or greater than the maximum starting torque [T_1]*2 and maximum stopping torque [T_3]*2 If the tentatively selected reduction gear is outside of the specifications, change the reduction gear model. *1 [T_{s1}]: Refer to the rating table on page 9 *2 [T_1] and [T_3]: Refer to page 27	[T_{s1}] 613 (Nm) ≥ [T_1] 173.5 (Nm) [T_3] 160.1 (Nm) According to the above conditions, the tentatively selected model should be no problem.
(3) Verify the output speed.		
N_{m0} ——— Average speed per cycle (rpm)	$N_{m0} = \frac{t_1 \times N_1 + t_2 \times N_2 + t_3 \times N_3}{t_4}$	$N_{m0} = \frac{0.5 \times 7.5 + 1.5 \times 15 + 0.5 \times 7.5}{20} = 1.5\,(\text{rpm})$
Verification of output speed	Check the following condition: The allowable output speed (100% duty ratio) [N_{S0}]*1 is equal to or greater than the average speed per cycle [N_{m0}] If the tentatively selected reduction gear is outside of the specifications, change the reduction gear model. Contact us regarding use of the model at a speed outside the allowable output speed (40% duty ratio) [N_{S1}]*1. Note: The value of [N_{S0}] is the speed at which the case temperature is balanced at 60ºC for 30 minutes. *1 [N_{S0}] and [N_{S1}]: Refer to the rating table on page 9	[N_{S0}] 57 (rpm) ≥ [N_{m0}] 1.5 (rpm) According to the above condition, the tentatively selected model should be no problem.
(4) Verify the shock torque at the time of an emergency stop.		
P_{em} ——— Expected number of emergency stop times (times)	Based on the operation conditions.	For example, an emergency stop occurs once a month. [P_{em}] = 1 x 12 x required life (year) [L_{ex}] = 12 x 5 = 60 (times)
T_{em} ——— Shock torque due to an emergency stop (Nm)	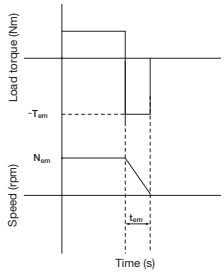 Shock torque due to an emergency stop [T_{em}] Set the operation conditions that meet the following requirement: Shock torque due to an emergency stop [T_{em}] is equal to or less than the momentary maximum allowable torque [T_{S2}]	For example, [T_{em}] = 500 (Nm)
N_{em} ——— Speed at the time of an emergency stop (rpm)		For example, [N_{em}] = 15 (rpm)
t_{em} ——— Deceleration time at the time of an emergency stop (s)		For example, [t_{em}] = 0.05 (s)
Z_4 ——— Number of pins for reduction gear	<table><tr><th>Model</th><th>Number of pins (Z_4)</th><th>Model</th><th>Number of pins (Z_4)</th></tr><tr><td>RV-25N</td><td rowspan="5">40</td><td>RV-125N</td><td rowspan="2">40</td></tr><tr><td>RV-42N</td><td>RV-160N</td></tr><tr><td>RV-60N</td><td>RV-380N</td><td>46</td></tr><tr><td>RV-80N</td><td>RV-500N</td><td rowspan="2">52</td></tr><tr><td>RV-100N</td><td>RV-700N</td></tr></table>	Number of pins for RV-25N: 40
C_{em} ——— Allowable number of shock torque application times	$C_{em} = \frac{775 \times \left(\frac{T_{S2}}{T_{em}}\right)^{\frac{10}{3}}}{Z_4 \times \frac{N_{em}}{60} \times t_{em}}$ Note [T_{S2}]: Momentary maximum allowable torque, refer to the rating table on page 9	$C_{em} = \frac{775 \times \left(\frac{1,225}{500}\right)^{\frac{10}{3}}}{40 \times \frac{15}{60} \times 0.05} = 30,729$ (times)
Verification of shock torque due to an emergency stop	Check the following condition: The allowable shock torque application count [C_{em}] is equal to or greater than the expected emergency stop count [P_{em}] If the tentatively selected reduction gear is outside of the specifications, change the reduction gear model.	[C_{em}] 30,729 ≥ [P_{em}] 60 According to the above condition, the tentatively selected model should be no problem.

Reduction gear selection method (2): Tentatively select a reduction gear model and evaluate the service life.

Setting/verification item	Calculation formula	Selection examples (With horizontal rotational transfer)
(5) Verify the thrust load and moment load.		
W_1 ——— R adial load (N)	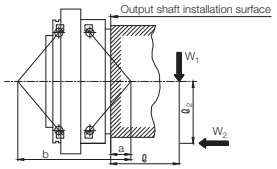 $M = \frac{W_1 \times (\ell + b - a) + W_2 \times \ell_2}{1{,}000}$ a,b: Refer to the calculation of the tilt angle on page 38.	0 (N)
ℓ ——— Distance to the point of radial load application (mm)		0 (mm)
W_2 ——— Thrust load (N)		$W_2 = (180 + 20 \times 4) \times 9.8$ $= 2{,}548$ (N)
ℓ_2 ——— Distance to the point of thrust load application (mm)		0 (mm) (As the workpiece center is located on the rotation axis)
M ——— Moment load (Nm)		RV-25N As dimension a = 22.1 (mm) and dimension b = 112.4 (mm): $M = \frac{0 \times (0 + 112.4 - 22.1) + 2{,}548 \times 0}{1{,}000}$ $= 0$ (Nm)
Verify the thrust load and moment load	Check that the thrust load and moment load are within the range in the allowable moment diagram on page 33. When radial load W_1 is applied within dimension b, use the reduction gear within the allowable radial load. Wr: Allowable radial load, see the rating table on page 9. If the tentatively selected reduction gear is outside of the specifications, change the reduction gear model.	For this example, Thrust load [W_2] = 2,548 (N) Moment load [M] = 0 (N) As the above values are within the range in the allowable moment diagram, the tentatively selected model should be no problem.
(6) Verify the reduction gear service life.		
L_h ——— Life (h)	$L_h = 6{,}000 \times \frac{N_0}{N_m} \times \left(\frac{T_0}{T_m}\right)^{\frac{10}{3}}$	$L_h = 6{,}000 \times \frac{15}{12} \times \left(\frac{245}{110.3}\right)^{\frac{10}{3}}$ $= 107{,}242$ (h)
Q_{1cy} ——— Number of cycles per day (times)	$Q_{1cy} = \frac{Q_1 \times 60 \times 60}{t_4}$	$Q_{1cy} = \frac{12 \times 60 \times 60}{20} = 2{,}160$ (times)
Q_3 ——— Operating hours per day (h)	$Q_3 = \frac{Q_{1cy} \times (t_1 + t_2 + t_3)}{60 \times 60}$	$Q_3 = \frac{2{,}160 \times (0.5 + 1.5 + 0.5)}{60 \times 60} = 1.5$ (h)
Q_4 ——— Operating hours per year (h)	$Q_4 = Q_3 \times Q_2$	$Q_4 = 1.5 \times 365 = 548$ (h)
L_{year} ——— Reduction gear service life (year)	$L_{year} = \frac{L_h}{Q_4}$	$L_{year} = \frac{107{,}242}{548} = 195.7$ (year)
L_{ex} ——— Required life (year)	Based on the operation conditions	5 years
Verification of the service life	Check the following condition: [L_{ex}] is equal to or less than [L_{year}] If the tentatively selected reduction gear is outside of the specifications, change the reduction gear model.	[L_{ex}] 5 (year) ≤ [L_{year}] 195.7 (year) According to the above condition, the tentatively selected model should be no problem.
Select the reduction gear model that satisfies all the conditions of the above verification items. The actual reduction ratio is determined based on the motor speed, input torque,and inertia moment. Check with the motor manufacturer.		Based on the above verification result, RV-25N is selected.

Limitation on the motor torque

A limitation is imposed on the motor torque value so that the shock torque applied to the reduction gear does not exceed the momentary maximum allowable torque.

Setting/verification item	Calculation formula	Selection examples (With horizontal rotational transfer)
T_{M1} ——— Motor momentary maximum torque (Nm)	Determine based on the motor specifications.	For example, T_{M1} = 10 (Nm)
T_{M1OUT} ——— Maximum torque generated at the output shaft for the reduction gear (Nm) (When an external shock is applied at the time of an emergency stop or motor stop)	$T_{M1out} = T_{M1} \times R \times \frac{100}{\eta}$ R: Actual reduction ratio η : Startup efficiency (%) ,refer to the rating table on page 9	For example, calculate the maximum torque generated at the output shaft for the reduction gear based on the specifications when RV-25N-164.07 was selected. $T_{M1out} = 10 \times 164.07 \times \frac{100}{80}$ = 2,051(Nm)
T_{M2OUT} ——— Maximum torque generated at the output shaft for the reduction gear (Nm) (When a shock is applied to the output shaft due to hitting by an obstacle)	$T_{M2out} = T_{M1} \times R \times \frac{\eta}{100}$	$T_{M2out} = 10 \times 164.07 \times \frac{80}{100}$ = 1,313(Nm)
Limitation on motor torque value	Check the following condition: The momentary maximum allowable torque [T_{S2}]*1 is equal to or greater than the maximum torque generated at the output shaft for the reduction gear [T_{M1OUT}] and [T_{M2OUT}] If the above condition is not satisfied, a limitation is imposed on the maximum torque value of the motor. *1 [T_{S2}]: Refer to the rating table on page 9	[T_{S2}] 1,225 (Nm) ≤ [T_{M1OUT}] 2,051 (Nm) and [T_{M2OUT}] 1,313 (Nm) According to the above condition, the torque limit is set for the motor.

Allowable moment diagram

RV-25N, 42N, 60N, 80N

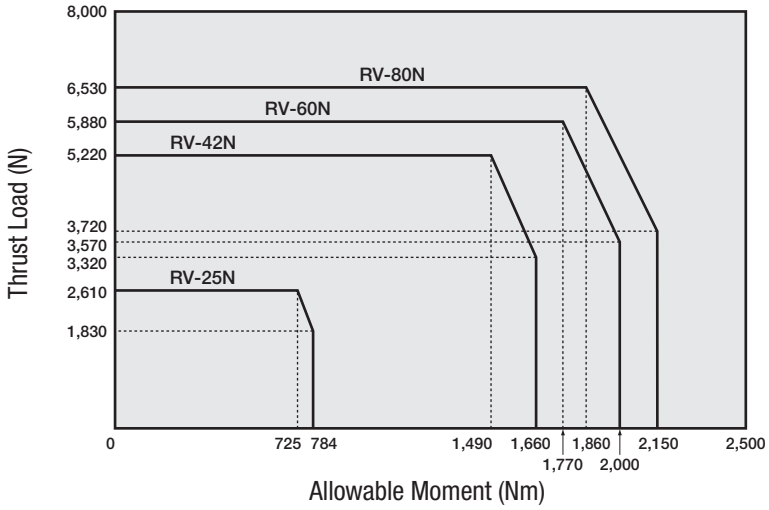

RV-100N, 125N, 160N

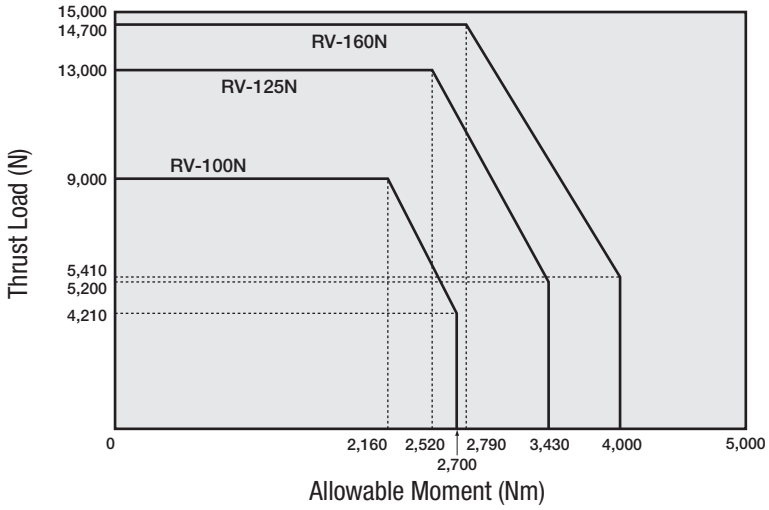

RV-380N, 500N, 700N

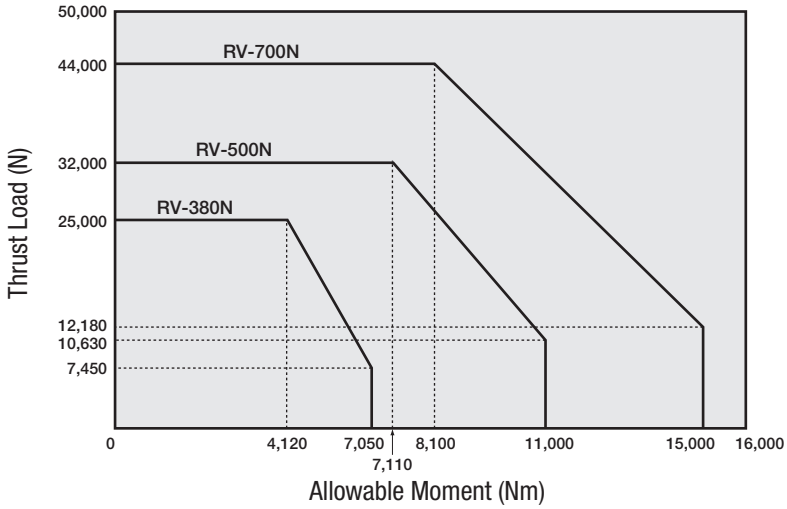

No-load running torque

Use the following formula to calculate the no-load running torque converted to the motor shaft.

$$\text{No-load running torque converted to the motor shaft (Nm)} = \frac{\text{Torque converted into the output shaft (Nm)}}{R} \quad \text{(R: speed ratio value)}$$

[Measurement conditions]
Case temperature: 30 (°C)
Lubricant: Grease
(VIGOGREASE RE0)

Note: The values in the following graphs are for the reduction gear alone, and indicate the average values after the break-in period.

RV-25N, 42N, 60N

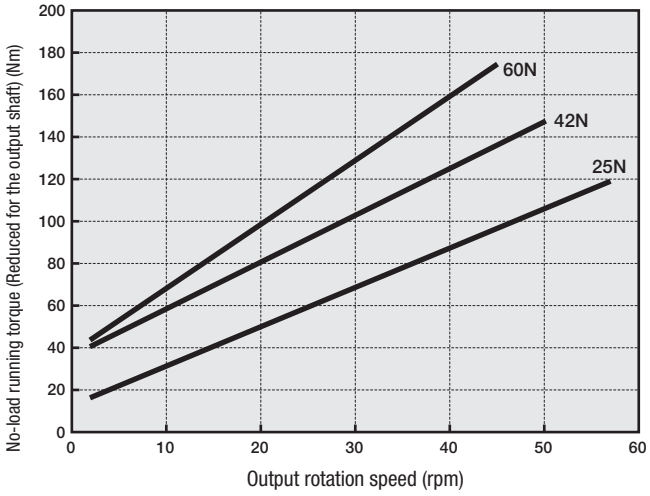

RV-80N, 100N, 125N, 160N

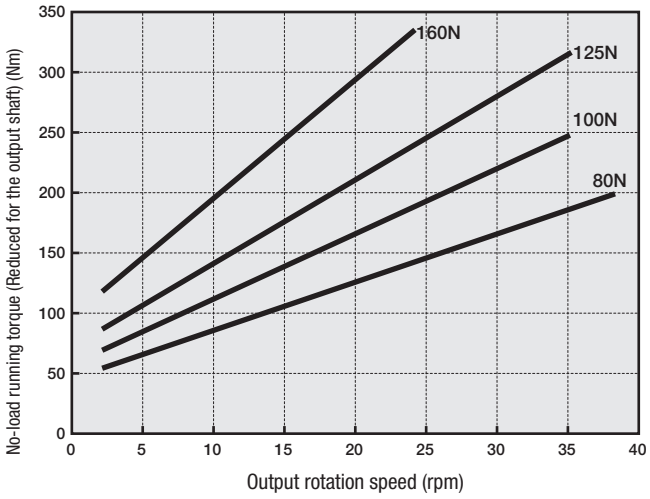

RV-380N, 500N, 700N

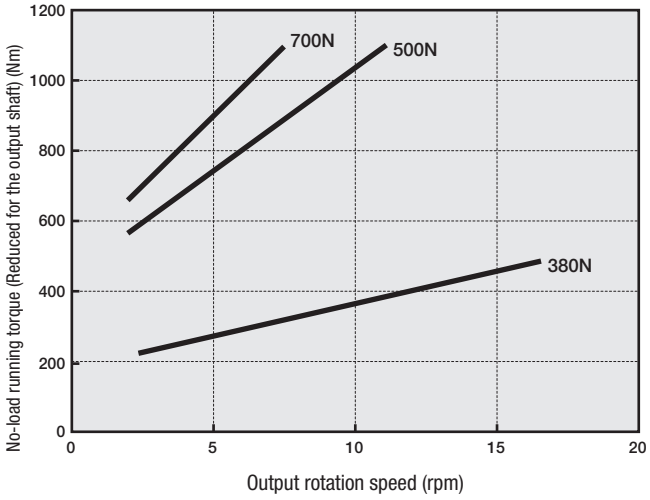

Low temperature characteristic

When the RV-N reduction gear is used at a low temperature, viscosity of lubricant increases and causes a larger no-load running torque. The no-load running torque at low temperature is shown below.
Use the following formula to calculate the no-load running torque converted to the motor shaft.

[Measurement conditions]
Input speed: 2,000 rpm
Lubricant: Grease
(VIGOGREASE RE0)

$$\text{No-load running torque converted to the motor shaft (Nm)} = \frac{\text{Torque converted into the output shaft (Nm)}}{R} \quad \text{(R: speed ratio value)}$$

RV-25N, 42N, 60N

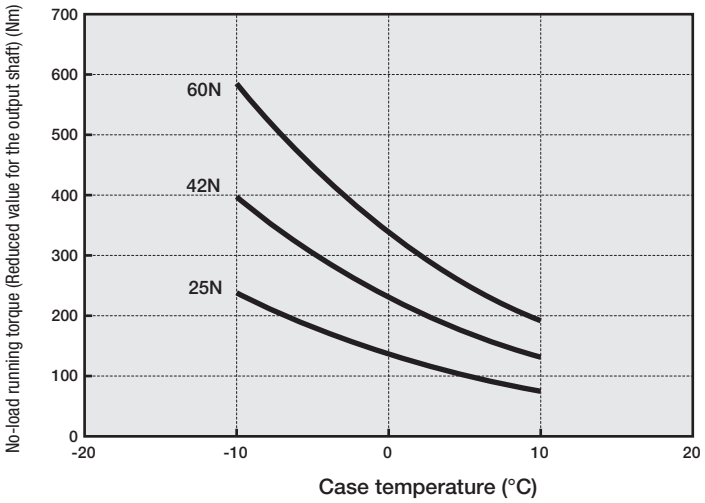

RV-80N, 100N, 125N, 160N

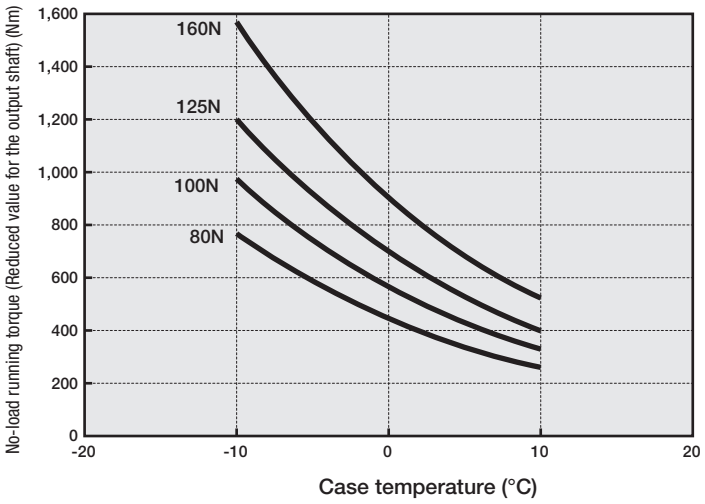

RV-380N, 500N

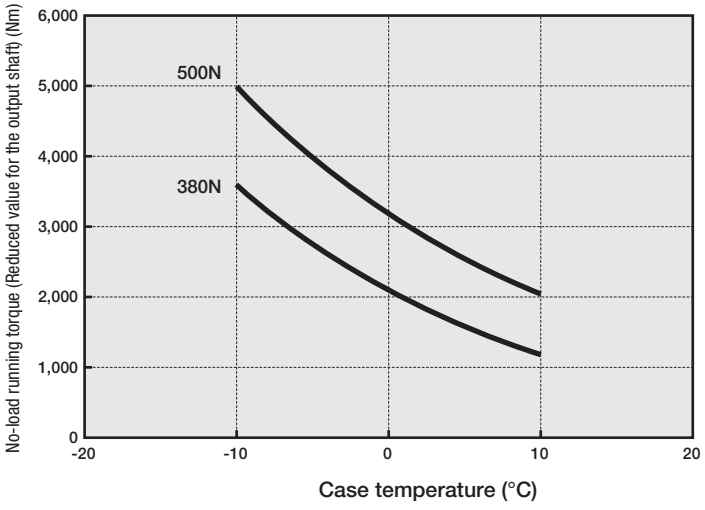

Efficiency table

[Measurement conditions]
Case temperature: 30 (ºC)
Lubricant: Grease (VIGOGREASE RE0)

RV-25N

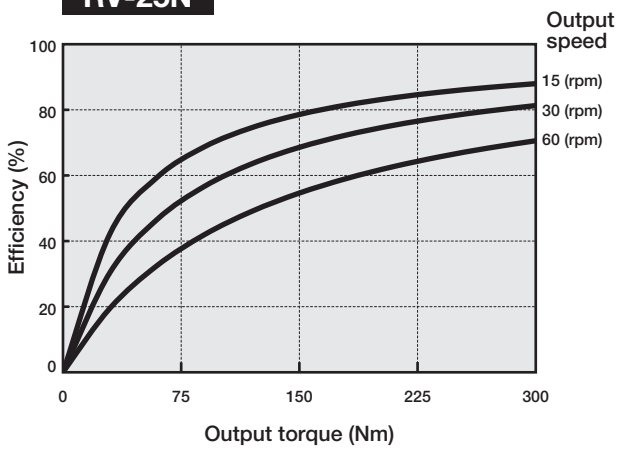

RV-42N

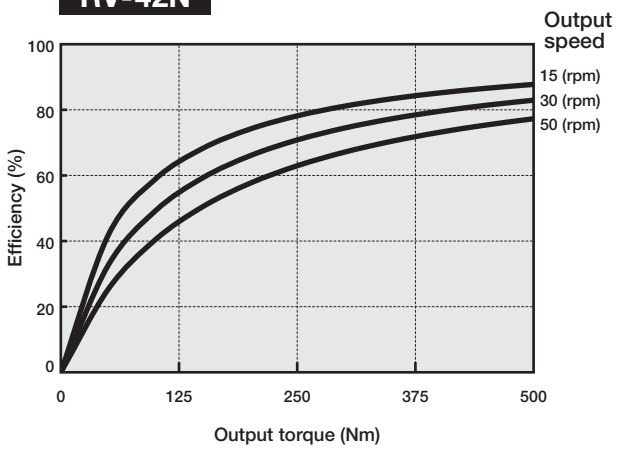

RV-60N

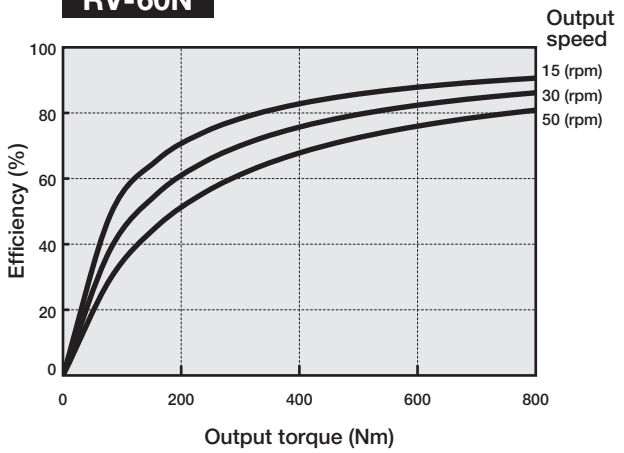

RV-80N

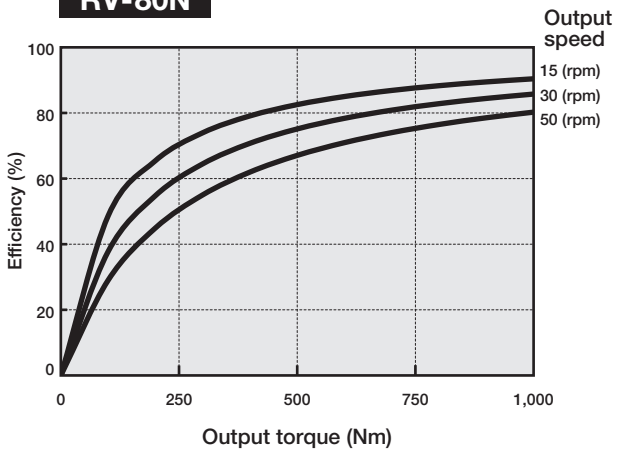

RV-100N

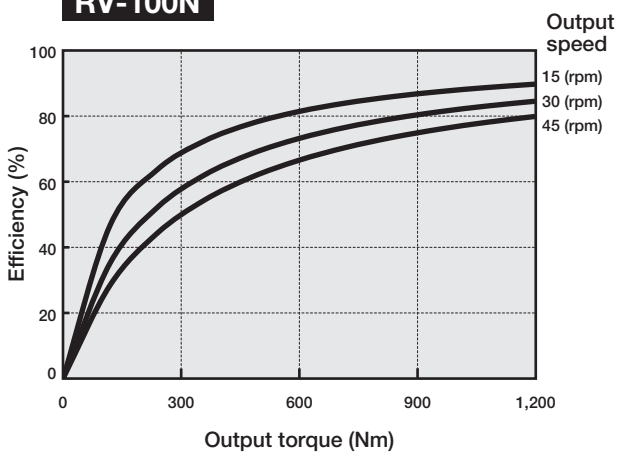

RV-125N

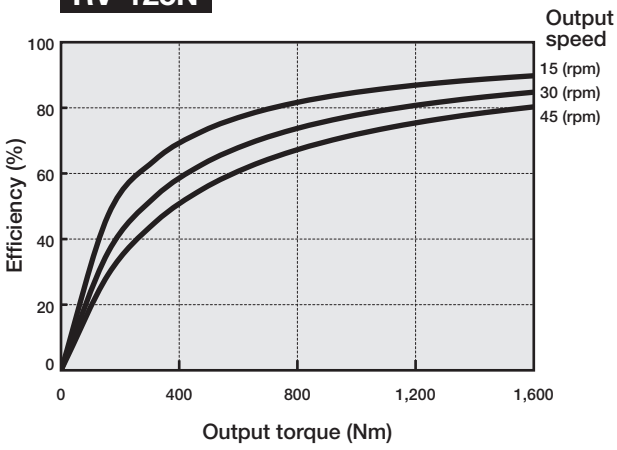

RV-160N

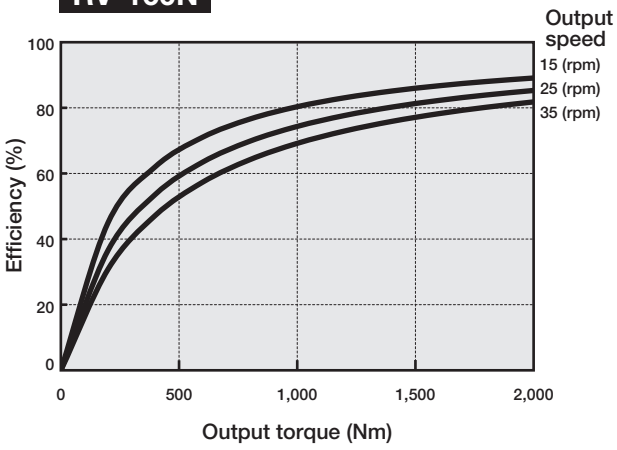

RV-380N

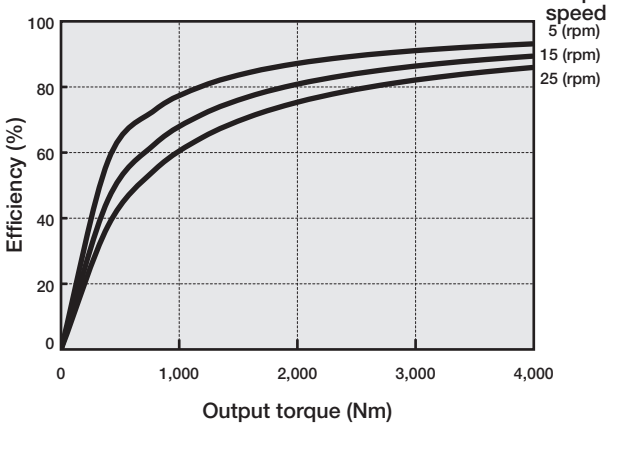

RV-500N

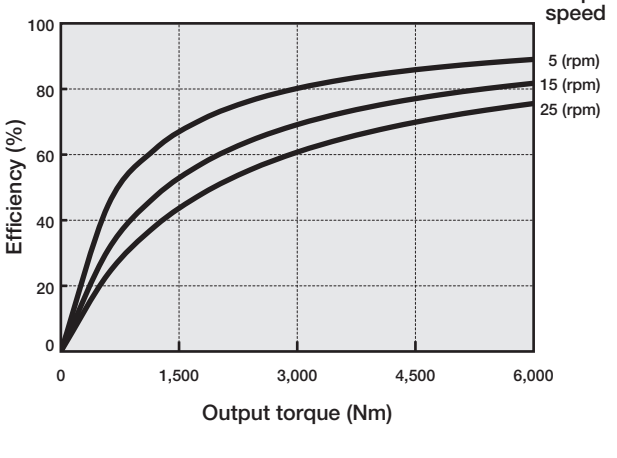

RV-700N

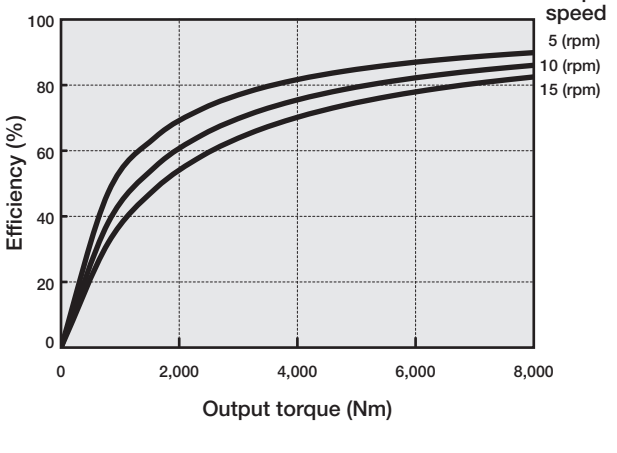

Calculation of tilt angle and torsion angle

Calculation of tilt angle

When a load moment occurs with an external load applied, the output shaft will tilt in proportion to the load moment (If ℓ_3 is larger than b, and ℓ_2 is larger than c/2) The moment rigidity indicates the rigidity of the main bearing, and it is represented by the load moment value required for tilting the main bearing by 1 arc.min.

$$\theta = \frac{W_1 \ell_1 + W_2 \ell_2}{M_1 \times 10^3}$$

θ : Tilt angle of the output shaft (arc.min.)
M_1 : Moment rigidity (Nm/arc.min.)
W_1, W_2 : Load (N)
ℓ_1, ℓ_2 : Distance to the point of load application (mm)

ℓ_1 : $\ell + \frac{b}{2} - a$

ℓ : Distance from the output shaft installation surface to the point of load application (mm)

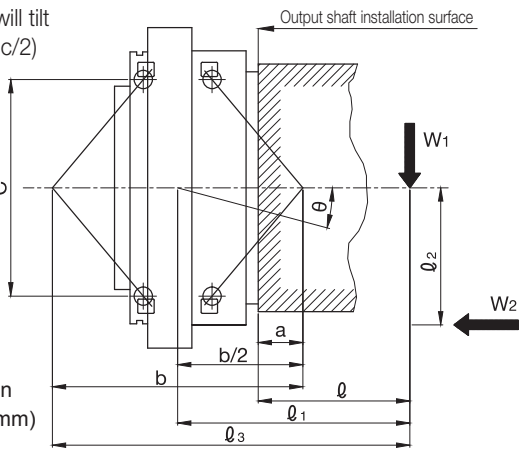

Model	Moment rigidity (central value) (Nm/arc.min.)	Dimensions (mm)		
		a	b	c
RV-25N	530	22.1	112.4	91
RV-42N	840	29	131.1	111
RV-60N	1,140	35	147.0	130
RV-80N	1,190	33.8	151.8	133
RV-100N	1,400	38.1	168.2	148

Model	Moment rigidity (central value) (Nm/arc.min.)	Dimensions (mm)		
		a	b	c
RV-125N	1,600	41.6	173.2	154
RV-160N	2,050	35.0	194.0	168
RV-380N	5,200	48.7	248.9	210
RV-500N	6,850	56.3	271.7	232
RV-700N	9,000	66.3	323.5	283

Calculation of torsion angle

Calculate the torsion angle when the torque is applied in a single direction, using an example of RV-160N.

1) When the load torque is 30 Nm·····Torsion angle (ST_1)
   • When the load torque is 3% or less of the rated torque

$$ST_1 = \frac{30}{48.0} \times \frac{1\ (\text{arc.min.})}{2} = 0.31(\text{arc.min.})\ \text{or less}$$

2) When the load torque is 1,300 Nm·····Torsion angle (ST_2)
   • When the load torque is more than 3% of the rated torque

$$ST_2 = \frac{1}{2} + \frac{1{,}300 - 48.0}{490} = 3.06\ (\text{arc.min.})$$

Note: 1. The torsion angles that are calculated above are for a single reduction gear.

Model	Torsional rigidity (central value) (Nm/arc.min.)	Lost motion		Backlash (arc.min.)
		Lost motion (arc.min.)	Measured torque (Nm)	
RV-25N	61	1.0	±7.35	1.0
RV-42N	113		±12.4	
RV-60N	200		±18.0	
RV-80N	212		±23.5	
RV-100N	312		±30.0	

Model	Torsional rigidity (central value) (Nm/arc.min.)	Lost motion		Backlash (arc.min.)
		Lost motion (arc.min.)	Measured torque (Nm)	
RV-125N	334	1.0	±36.8	1.0
RV-160N	490		±48.0	
RV-380N	948		±112	
RV-500N	1,620		±147	
RV-700N	2,600		±210	

Reduction gear installation components

Installation of the reduction gear and mounting it to the output shaft

When installing the reduction gear and mounting it to the output shaft, use hexagon socket head cap screws and tighten to the torque, as specified below, in order to satisfy the momentary maximum allowable torque, which is noted in the rating table.
The use of the Belleville spring washers are recommended to prevent the bolt from loosening and protect the bolt seat surface from flaws.

• Hexagon socket head cap screw

<Bolt tightening torque and tightening force>

Hexagon socket head cap screw nominal size x pitch (mm)	Tightening torque (Nm)	Tightening force F (N)	Bolt specification
M5 × 0.8	9.01 ± 0.49	9,310	Hexagon socket head cap screw JIS B 1176: 2006 or equivalent (ISO 4762) Strength class JIS B 1051: 2000 12.9 or equivalent (ISO 898-1) Thread JIS B 0209: 2001 6g or equivalent
M6 × 1.0	15.6 ± 0.78	13,180	
M8 × 1.25	37.2 ± 1.86	23,960	
M10 × 1.5	73.5 ± 3.43	38,080	
M12 × 1.75	129 ± 6.37	55,100	
M16 × 2.0	319 ± 15.9	103,410	

Note: 1. The tightening torque values listed are for steel or cast iron material.
2. If softer material, such as aluminum or stainless, is used, limit the tightening torque. Also take the transmission torque and load moment into due consideration.

<Calculation of allowable transmission torque of bolts>

$$T = F \times \mu \times \frac{D}{2 \times 1{,}000} \times n$$

T	Allowable transmission torque by tightening bolt (Nm)
F	Bolt tightening force (N)
D	Bolt mounting P.C.D. (mm)
μ	Friction factor μ=0.15: When lubricant remains on the mating face. μ=0.20: When lubricant is removed from the mating face.
n	Number of bolts (pcs.)

• Serrated lock washer external teeth for hexagon socket head cap screw

Name:Belleville spring washer (made by Heiwa Hatsujyo Industry Co., Ltd.)
Corporation symbol: CDW-H
CDW-L (Only for M5)
Material: S50C to S70C
Hardness: HRC40 to 48

(Unit: mm)

Nominal size	ID and OD of Belleville spring washer		t	H
	Ød	ØD		
5	5.25	8.5	0.6	0.85
6	6.4	10	1.0	1.25
8	8.4	13	1.2	1.55
10	10.6	16	1.5	1.9
12	12.6	18	1.8	2.2
16	16.9	24	2.3	2.8

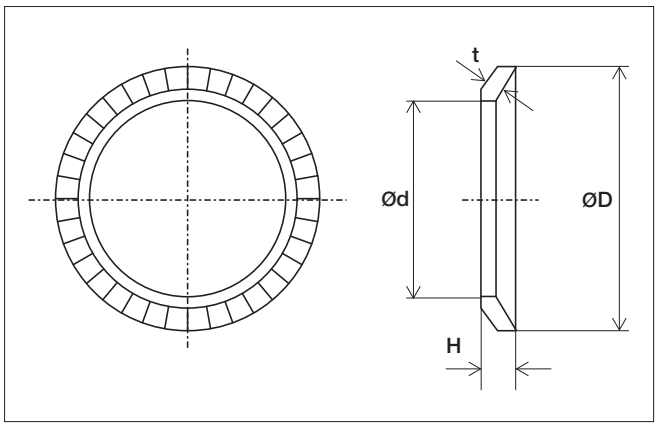

Note: When using any equivalent washer, select it with special care given to its outside diameter.

Design of the motor mounting flange

In order to avoid contact with reduction gear components, refer to the sizes indicated in the “Outer dimensions” drawings when designing the motor mounting flange.

Note: The size and number of bolts for the motor mounting flange should be determined with the torque and moment taken into consideration, and should be positioned in line with the reduction gear’s case mounting holes. After installing the reduction gear, we recommend installing an add/drain grease fitting to enable grease replacement. An installation example is shown below.
Use the specified tightening torque to uniformly tighten the hexagon socket head cap screws (with corresponding conical spring washers).

Design the motor mounting flange to the following accuracy.
If the installation accuracy is poor, it will result in vibration and noise.

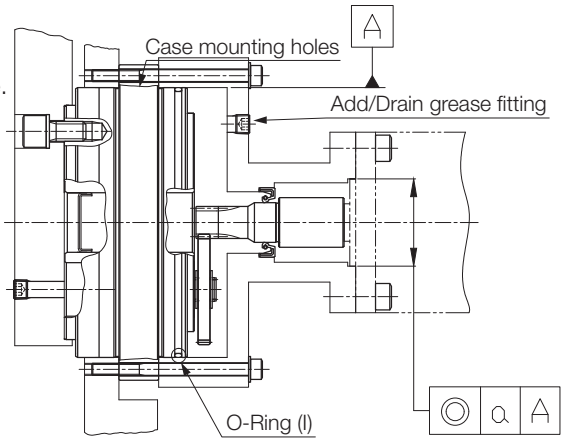

• Installation accuracy

Model	Concentricity tolerance a (mm)
RV-25N	MAX Ø0.03
RV-42N	MAX Ø0.03
RV-60N	MAX Ø0.03
RV-80N	MAX Ø0.03
RV-100N	MAX Ø0.03

Model	Concentricity tolerance a (mm)
RV-125N	MAX Ø0.03
RV-160N	MAX Ø0.03
RV-380N	MAX Ø0.05
RV-500N	MAX Ø0.05
RV-700N	MAX Ø0.05

Suited O-rings for O-Ring (I) in the diagram above are indicated in the following tables. Refer to these tables when designing seals for the installation components.

• O-Ring (I) JIS B 2401: 2012, SAE AS568

(Unit: mm)

Model	O-ring number	O-ring dimensions	
		Inside diameter	Width
RV-25N	S110*	Ø109.5	Ø2.0
RV-42N	AS568-159	Ø126.67	Ø2.62
RV-60N	AS568-258	Ø151.99	Ø3.53
RV-80N	AS568-258	Ø151.99	Ø3.53
RV-100N	AS568-166	Ø171.12	Ø2.62

(Unit: mm)

Model	O-ring number	O-ring dimensions	
		Inside diameter	Width
RV-125N	AS568-167	Ø177.47	Ø2.62
RV-160N	AS568-170	Ø196.52	Ø2.62
RV-380N	AS568-272	Ø240.89	Ø3.53
RV-500N	AS568-275	Ø266.29	Ø3.53
RV-700N	G340	Ø339.3	Ø5.7

* S110 is the manufacturer’s own standard.

Note: If it is difficult to purchase any of the O-rings in the table above, select an O-ring based on the design standard of each manufacturer by referring to the dimensions listed above.

Design of the case and shaft installation components

Align the case bolt holes with the tapped holes of the installation components, and the tapped holes of the shaft with the installation component bolt holes, and install the case with the designated number of bolts. Use the specified tightening torque to uniformly tighten the hexagon socket head cap screws (with corresponding conical spring washers). Use either the outside or inside fit for the shaft.
After installing the reduction gear, we recommend installing an add/drain grease fitting to enable grease replacement. An installation example is shown at right.

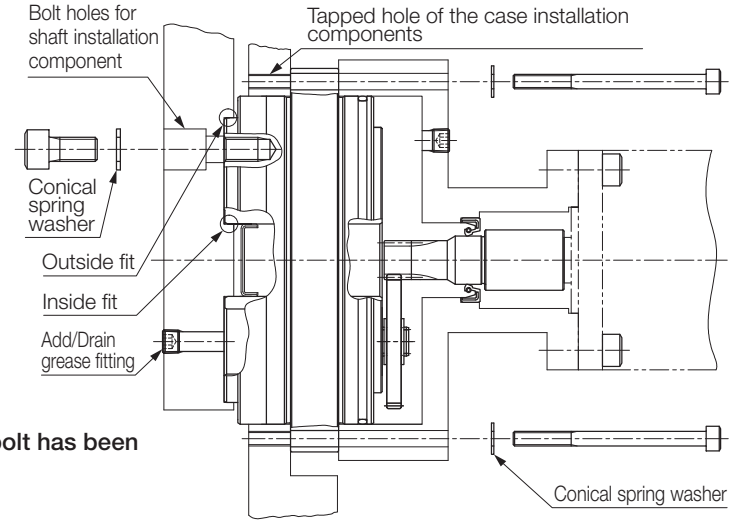

Note: Always verify after installation that each bolt has been tightened at the specified torque.

Suited O-rings for O-Ring (I) in the diagram above are indicated in the following tables. Refer to these tables when designing seals for the installation components.

· For RV-160N, 380N, 500N and 700N models

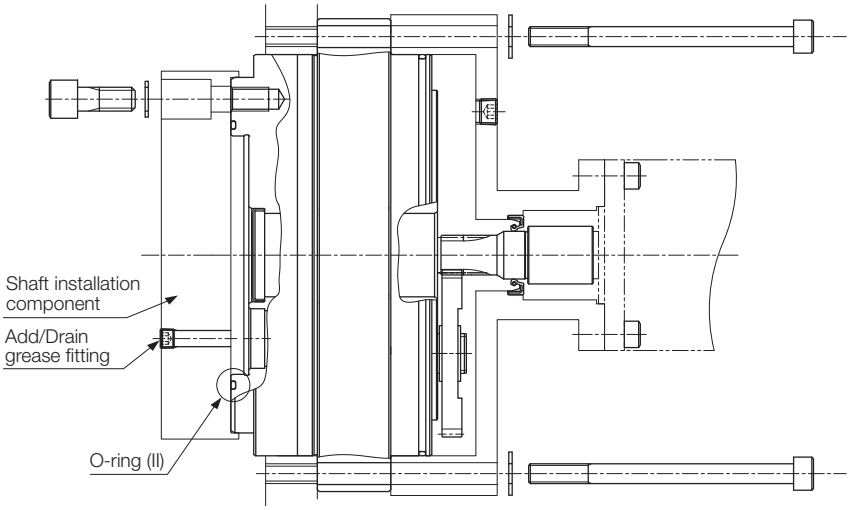

• O-Ring (II) **JIS B 2401: 2012**

(Unit: mm)

Model	Bearing number	O-ring dimensions	
		Inside diameter	Width
RV-160N	G130	Ø129.4	Ø3.1
RV-380N	G145	Ø144.4	Ø3.1
RV-500N	G185	Ø184.3	Ø5.7
RV-700N	G200	Ø199.3	Ø5.7

Note: If it is difficult to purchase any of the O-rings in the table above, select an O-ring based on the design standard of each manufacturer by referring to the dimensions listed above.

If a model other than those listed above is used or an O-ring cannot be used for structural reasons, seal the part by referring to the following instructions.

• Recommended liquid sealant

Refer to the diagram at right and apply the sealant so that it does not get inside the reduction gear and does not leak out of the shaft installation bolt hole.

Name (Manufacturer)	Characteristics and applications
ThreeBond 1211 (ThreeBond Co.)	• Silicone-based, solventless type • Semi-dry gasket
HermeSeal SS-60F (Nihon Hermetics Co.)	• One-part, non-solvent elastic sealant • Metal contact side (flange surface) seal • Any product basically equivalent to ThreeBond 1211
Loctite 515 (Henkel)	• Anaerobic flange sealant • Metal contact side (flange surface) seal

Example application

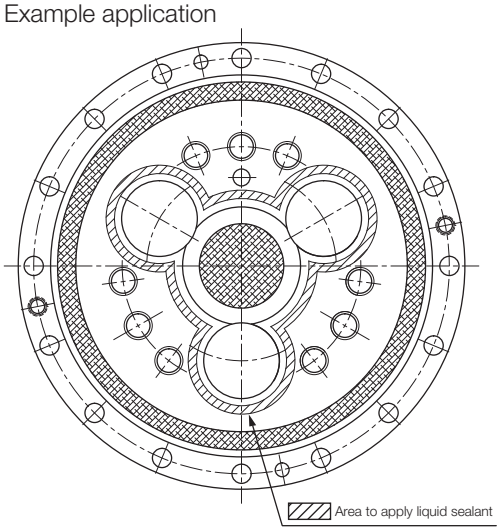

Note: 1. Do not use for copper or a copper alloy.

2. Contact us regarding use under special conditions (concentrated alkali, high-pressure steam, etc.)

Input gears

We have a variety of standard input gears for each model and speed ratio that can be additionally machined by the customers.
Please machine and install the standard input gear based on the customer's intended use, by referring to the following examples.

Standard input gear specifications

Material	
Heat treatment	Carburizing, quenching and tempering
Surface hardness	HRC58 to 62 (excluding the carburizing prevention range)
Material	SCM415 Normalizing or equivalent material

<Standard input gear A: For small motors>

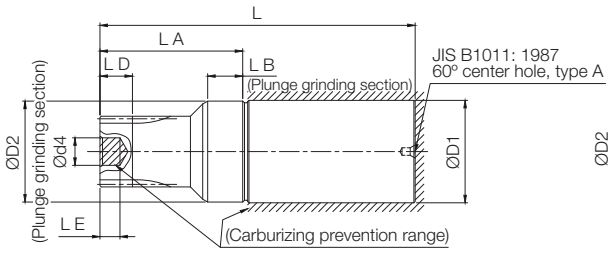

<Standard input gear B: For large motors>

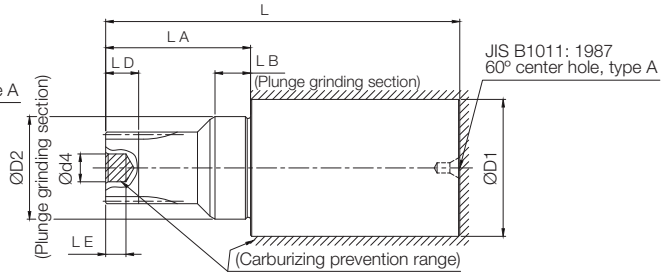

Note: The above drawing shows the shape before the additional machining is performed.
Check the dimensions of each section in the "Dimensions" table on pages 46 and 47.

· Reference for additional machining

Standard input gears come equipped with center holes.
When modifying them, be sure to grind the boss outer diameter (D1) with reference to the center hole, and use it as the reference surface.

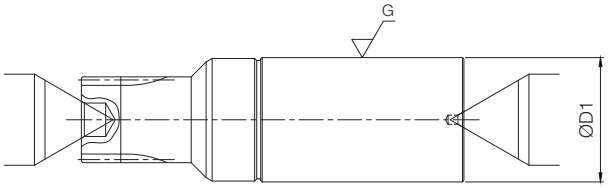

Design of the input gear

Please refer to the chart below. Use it as a reference when the customer designs an input gear on their own.

• Design flow

When modifying the standard input gear

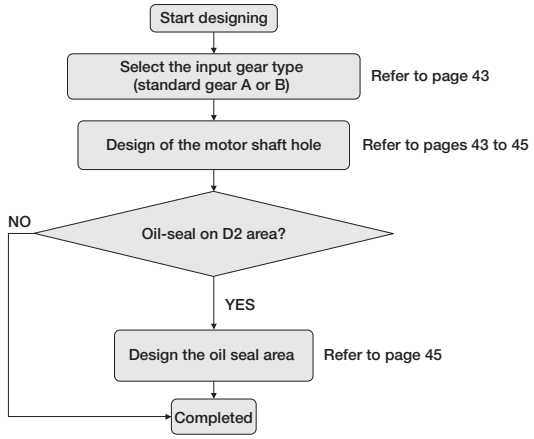

When manufacturing a special input gear

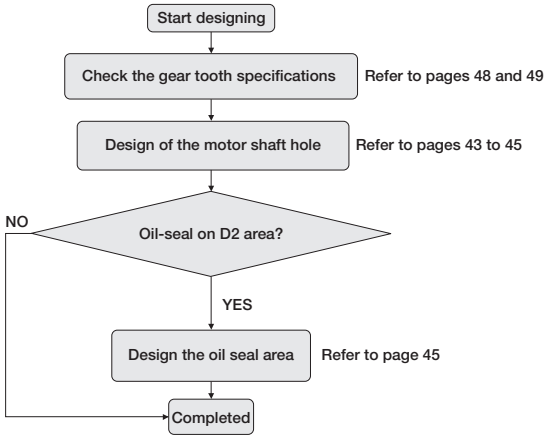

• Selection of the input gear type

There are the two types of standard input gear:

Standard input gear A: For small motors
Standard input gear B: For large motors

Select the type of input gear to be used by referring to the tables below.

Applicable motor shaft diameters for standard input gear

(Unit: mm)

Model	Standard input gear A	Standard input gear B
RV-25N	Less than Ø28	Ø28 or more
RV-42N	Less than Ø32	Ø32 or more
RV-60N	Less than Ø32	Ø32 or more
RV-80N	Less than Ø38	Ø38 or more
RV-100N	Ø42 or less	

(Unit: mm)

Model	Standard input gear A	Standard input gear B
RV-125N	Ø42 or less	
RV-160N	Ø48 or less	
RV-380N	Less than Ø55	Ø55 or more
RV-500N	Less than Ø55	Ø55 or more
RV-700N	Less than Ø55	Ø55 or more

Note: Some models have only standard input gear A.

• Design of the motor shaft hole

<Design example 1: For straight shafts (attached to motor shaft tip)>

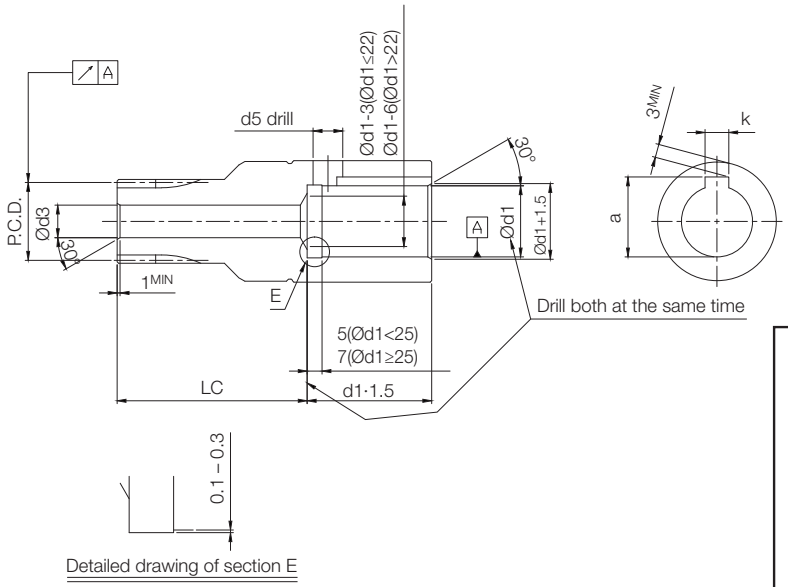

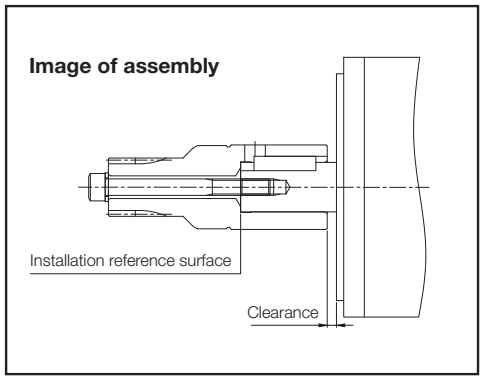

Note: 1. When a tapped hole is used for the motor shaft, fix the input gear to the motor shaft with a bolt.
2. For the bolt through hole diameter (d3), radial runout, and the shaft hole position (LC), refer to "Dimensions after modification" in the "Dimensions" table on pages 46 and 47.
3. If the bolt through hole diameter (d3) is larger than the center hole diameter on the tooth surface side (d4), it is necessary to process the carburized surface. In such a case, confirm the applicable tools and processing conditions, etc.
4. The clearance hole diameter for the key slot (d5) is "key slot width (k) + 2 mm", approximately. [The clearance hole diameter must be larger than the key slot width (k).]
5. Design the motor shaft hole diameter (d1) according to the motor shaft diameter to be used.
6. For the key slot width (k) and key slot height (a), refer to the specifications of the key to be used.

<Design example 2: For straight shafts (attached to motor shaft base)>

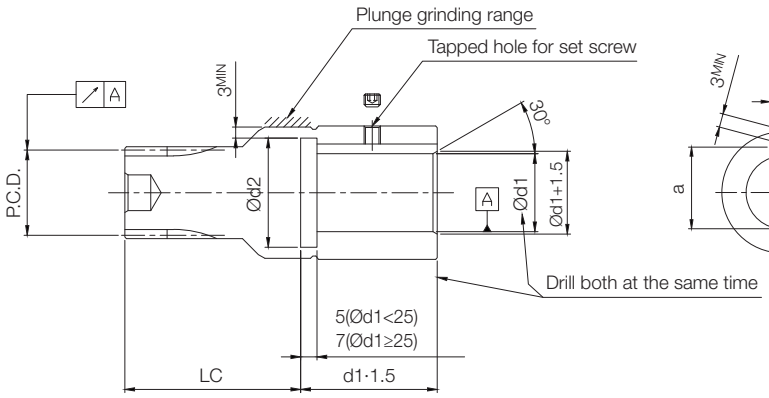

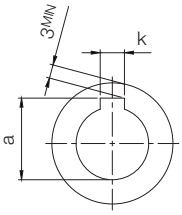

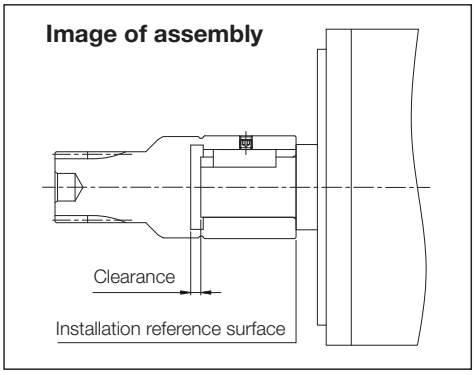

Note: 1. When a tapped hole is not used for the motor shaft, fix the input gear to the motor shaft with a set screw.
2. If a clearance hole for the key slot cannot be drilled due to some reason, such as the plunge grinding area being located on the outer periphery, create a recessed groove instead.
3. For the radial runout and the shaft hole position (LC), refer to "Dimensions after modification" in the "Dimensions" table on pages 46 and 47.
4. Design the motor shaft hole diameter (d1) according to the motor shaft diameter to be used.
5. For the key slot width (k) and key slot height (a), refer to the specifications of the key to be used.
6. Design the diameter of the recessed groove for the key slot (d2) according to the following instructions.

· Recessed groove diameter for key slot

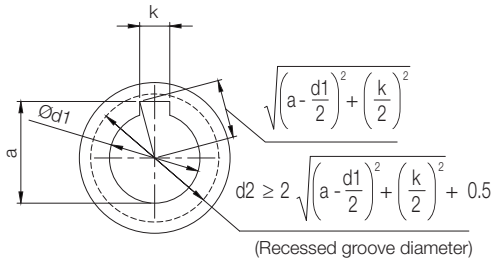

Set the diameter of the recessed groove (d2) so that it is larger than the corner of the key slot.
Although the following calculation formula is used in this example, design the diameter using appropriate values, based on the key groove tolerance, processing tolerance, etc.

$$d2 \geq 2\sqrt{\left(a-\frac{d1}{2}\right)^2+\left(\frac{k}{2}\right)^2}+0.5$$

The following is an example of when the diameter of the recessed groove is selected based on the above calculation formula. Use it as a reference when designing.

Selection example of recessed groove diameter (d2)

(Unit: mm)

Motor shaft hole diameter Ød1	Key slot width k	Key slot height a	Recessed groove diameter Ød2
8	3	9.4	12
9	3	10.4	13
10	4	11.8	15
11	4	12.8	16
14	5	16.3	20
15	5	17.3	21
16	5	18.3	22
17	6	19.8	24
19	6	21.8	26

(Unit: mm)

Motor shaft hole diameter Ød1	Key slot width k	Key slot height a	Recessed groove diameter Ød2
22	8	25.3	31
24	8	27.3	33
25	8	28.3	34
28	8	31.3	37
32	10	35.3	41
35	10	38.3	44
38	10	41.3	47
38	12	41.3	47
42	12	45.3	51

<Design example 3: For tapered shafts>

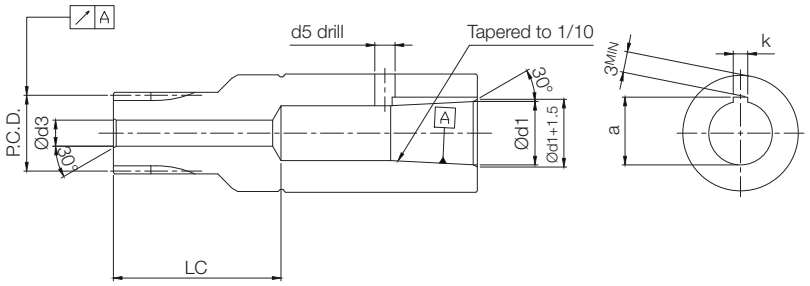

Note: 1. For the bolt through hole diameter (d3), radial runout, and the shaft hole position (LC), refer to "Dimensions after modification" in the "Dimensions" table on pages 46 and 47.
2. Design the motor shaft hole diameter (d1) according to the motor shaft diameter to be used.
3. For the key slot width (k) and key slot height (a), refer to the specifications of the key to be used.
4. There are two ways to fix the tapered shaft to the motor shaft: draw nut and draw bolt. Fix the shaft using either of them, referring to the drawings below.
5. You can manufacture the draw nut and draw bolt on your own, or contact us.

· When fixing with a draw nut

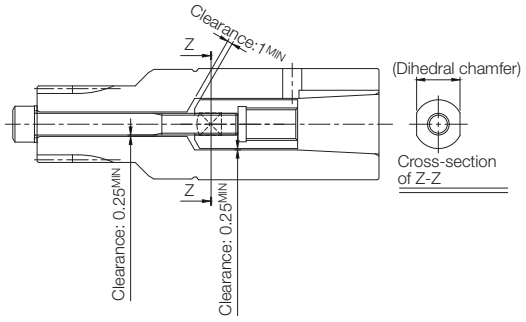

· When fixing with a draw bolt

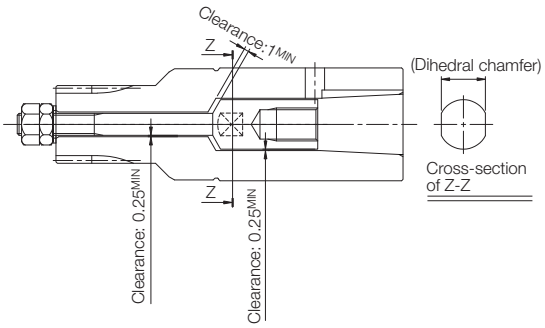

• Design of the oil seal area

<Design example 4>

The D2 section can be used as a lip surface for the oil seal by plunge grinding.

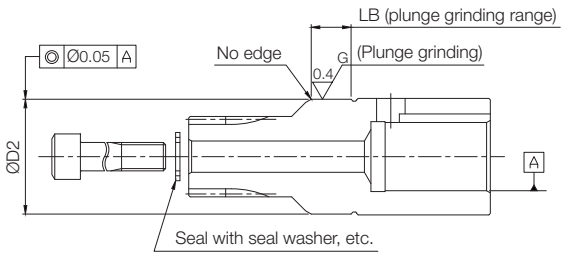

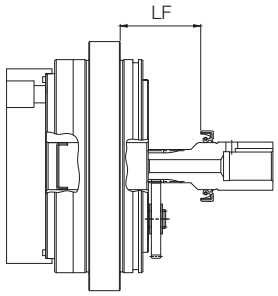

Note: 1. The design specifications vary depending on the oil seal manufacturer. When designing, be sure to confirm with the manufacturer of the oil seal to be used.
2. If the plunge grinding diameter (D2) is processed using a value other than those listed in the "Dimensions" table on pages 46 and 47, appropriate surface hardness may not be obtained.
3. Rubber containing fluorine is recommended for the material of the oil seal.
4. When assembling the oil seal, be careful to avoid any contact between the lip section and the gear, as it causes scratches.
5. Design the oil seal with reference to the oil seal assembly position (LF), so that the lip section of the oil seal does not fall off from the plunge grinding range (LB).

Installation of the input gear

<Model: RV-25N> (Unit: mm)

Ratio code	Dimensions before modification (when shipped)												Dimensions after modification					Assembly dimensions
	ØD2	Ød4	LE	LD +2.0 0	[Standard input gear A]				[Standard input gear B]				ØD2	Ød3 MAX	Radial runout	[Standard input gear A]	[Standard input gear B]	LF
					L	LA	LB	ØD1	L	LA	LB	ØD1				LC MIN	LC MIN	
41	40.4	11	8	13	126.1	57.1	14	41	139.6	57.1	14	54	40h8	17.6	0.055	51.4	60.1	66
81		9	7	12	129	60			142.5	60				10.8	0.050	54.3	63	
107.66		9	7	12	129	60			142.5	60				9.6	0.047	54.3	63	
126		7	7	12	129	60			142.5	60				8.0	0.047	54.3	63	
137		7	7	12	129	60			142.5	60				7.2	0.043	54.3	63	
164.07		5.5	6	13	129	60			142.5	60				5.6	0.043	54.3	63	

<Model: RV-42N> (Unit: mm)

Ratio code	Dimensions before modification (when shipped)												Dimensions after modification					Assembly dimensions
	ØD2	Ød4	LE	LD +2.0 0	[Standard input gear A]				[Standard input gear B]				ØD2	Ød3 MAX	Radial runout	[Standard input gear A]	[Standard input gear B]	LF
					L	LA	LB	ØD1	L	LA	LB	ØD1				LC MIN	LC MIN	
41	50.4	11	8	15	135.6	61.6	15.5	50.4	146.6	64.1	18	57	50h8	26.8	0.055	57.7	58.7	67
81		11	8	12.5	138.5	64.5			149.5	67				15.6	0.050	60.6	61.6	
105		11	8	12.5	138.5	64.5			149.5	67				11.8	0.050	60.6	61.6	
126		9	7	12.5	138.5	64.5			149.5	67				10.5	0.047	60.6	61.6	
141		7	7	12.5	138.5	64.5			149.5	67				8.1	0.050	60.6	61.6	
164.07		7	7	12.5	138.5	64.5			149.5	67				7.5	0.047	60.6	61.6	

<Model: RV-60N> (Unit: mm)

Ratio code	Dimensions before modification (when shipped)												Dimensions after modification					Assembly dimensions
	ØD2	Ød4	LE	LD +2.0 0	[Standard input gear A]				[Standard input gear B]				ØD2	Ød3 MAX	Radial runout	[Standard input gear A]	[Standard input gear B]	LF
					L	LA	LB	ØD1	L	LA	LB	ØD1				LC MIN	LC MIN	
41	50.4	11	8	14	136.1	62.1	15.5	50.4	147.1	64.6	18	57	50h8	30.0	0.055	58.2	59.2	68
81		11	8	13.5	139	65			150	67.5				17.2	0.055	61.1	62.1	
102.17		11	8	13.5	139	65			150	67.5				13.7	0.050	61.1	62.1	
121		11	8	13.5	139	65			150	67.5				11.8	0.050	61.1	62.1	
145.61		7	7	13.5	139	65			150	67.5				8.7	0.050	61.1	62.1	
161		7	7	13.5	139	65			150	67.5				8.1	0.050	61.1	62.1	

<Model: RV-80N> (Unit: mm)

Ratio code	Dimensions before modification (when shipped)												Dimensions after modification					Assembly dimensions
	ØD2	Ød4	LE	LD +2.0 0	[Standard input gear A]				[Standard input gear B]				ØD2	Ød3 MAX	Radial runout	[Standard input gear A]	[Standard input gear B]	LF
					L	LA	LB	ØD1	L	LA	LB	ØD1				LC MIN	LC MIN	
41	55.4	11	8	17.5	146	65.5	15.5	55.4	185	68	18	60	55h8	30.7	0.055	61.6	64	74
81		11	8	16	148.9	68.4			187.9	70.9				17.6	0.055	64.5	66.9	
101		11	8	14.5	148.9	68.4			187.9	70.9				15.6	0.050	64.5	66.9	
129		11	8	14.5	148.9	68.4			187.9	70.9				11.8	0.050	64.5	66.9	
141		9	7	14.5	148.9	68.4			187.9	70.9				10.6	0.050	64.5	66.9	
171		7	7	14.5	148.9	68.4			187.9	70.9				8.1	0.050	64.5	66.9	

<Model: RV-100N> (Unit: mm)

Ratio code	Dimensions before modification (when shipped)												Dimensions after modification					Assembly dimensions
	ØD2	Ød4	LE	LD +2.0 0	[Standard input gear A]				[Standard input gear B]				ØD2	Ød3 MAX	Radial runout	[Standard input gear A]	[Standard input gear B]	LF
					L	LA	LB	ØD1	L	LA	LB	ØD1				LC MIN	LC MIN	
41	60.4	11	8	19	182.2	67.2	15.5	60.4					60h8	36.7	0.055	65.7		74
81		11	8	15	185.1	70.1								20.2	0.055	68.6		
102.17		11	8	15	185.1	70.1								17.2	0.055	68.6		
121		11	8	15	185.1	70.1								13.2	0.050	68.6		
141		11	8	15	185.1	70.1								13.1	0.050	68.6		
161		9	7	15	185.1	70.1								9.7	0.050	68.6		

<Model: RV-125N> (Unit: mm)

Ratio code	Dimensions before modification (when shipped)												Dimensions after modification					Assembly dimensions
	ØD2	Ød4	LE	LD +2.0 0	[Standard input gear A]				[Standard input gear B]				ØD2	Ød3 MAX	Radial runout	[Standard input gear A]	[Standard input gear B]	LF
					L	LA	LB	ØD1	L	LA	LB	ØD1				LC MIN	LC MIN	
41	60.4	11	8	19	182.2	67.2	15.5	60.4					60h8	36.7	0.055	65.7		77
81		11	8	15	185.1	70.1								21.7	0.055	68.6		
102.17		11	8	15	185.1	70.1								17.2	0.055	68.6		
121		11	8	15	185.1	70.1								14.2	0.050	68.6		
145.61		11	8	15	185.1	70.1								11.2	0.050	68.6		
161		9	7	15	185.1	70.1								9.7	0.050	68.6		

<Model: RV-160N> (Unit: mm)

Ratio code	Dimensions before modification (when shipped)												Dimensions after modification					Assembly dimensions
	ØD2	Ød4	LE	LD +2.0 0	[Standard input gear A]				[Standard input gear B]				ØD2	Ød3 MAX	Radial runout	[Standard input gear A]	[Standard input gear B]	LF
					L	LA	LB	ØD1	L	LA	LB	ØD1				LC MIN	LC MIN	
41	65.4	11	8	17	187.1	72.1	15.5	65.4					65h8	37.0	0.059	72.6		83
81		11	8	16.5	190	75								23.9	0.055	75.5		
102.81		11	8	16.5	190	75								20.6	0.055	75.5		
125.21		11	8	16.5	190	75								16.8	0.050	75.5		
156		11	8	16.5	190	75								13.1	0.050	75.5		
201		9	7	16.5	190	75								9.3	0.050	75.5		

<Model: RV-380N> (Unit: mm)

Ratio code	Dimensions before modification (when shipped)												Dimensions after modification					Assembly dimensions
	ØD2	Ød4	LE	LD +2.0 0	[Standard input gear A]				[Standard input gear B]				ØD2	Ød3 MAX	Radial runout	[Standard input gear A]	[Standard input gear B]	LF
					L	LA	LB	ØD1	L	LA	LB	ØD1				LC MIN	LC MIN	
75	65.4	11	8	21	190.1	75.1	15.5	65.4	196.6	77.6	18	72	65h8	33.0	0.059	75.6	80.6	97
93		11	8	21	190.1	75.1			196.6	77.6				27.0	0.059	75.6	80.6	
117		11	8	23.5	193	78			199.5	80.5				25.5	0.055	78.5	83.5	
139		11	8	23.5	193	78			199.5	80.5				22.5	0.055	78.5	83.5	
162		11	8	23.5	193	78			199.5	80.5				18.0	0.055	78.5	83.5	
185		11	8	23.5	193	78			199.5	80.5				18.0	0.047	78.5	83.5	

<Model: RV-500N> (Unit: mm)

Ratio code	Dimensions before modification (when shipped)												Dimensions after modification					Assembly dimensions
	ØD2	Ød4	LE	LD +2.0 0	[Standard input gear A]				[Standard input gear B]				ØD2	Ød3 MAX	Radial runout	[Standard input gear A]	[Standard input gear B]	LF
					L	LA	LB	ØD1	L	LA	LB	ØD1				LC MIN	LC MIN	
81	65.4	11	8	22.5	189.6	74.6	16.5	65.4	222.1	77.1	19	78	65h8	39.0	0.066	74.1	80.1	93
105		11	8	23	192.5	77.5			225	80				32.3	0.059	77	83	
123		11	8	22	192.5	77.5			225	80				30.7	0.055	77	83	
144		11	8	22	192.5	77.5			225	80				28.1	0.055	77	83	
159		11	8	23	192.5	77.5			225	80				25.6	0.055	77	83	
192.75		11	8	22	192.5	77.5			225	80				18.3	0.059	77	83	

<Model: RV-700N> (Unit: mm)

Ratio code	Dimensions before modification (when shipped)												Dimensions after modification					Assembly dimensions
	ØD2	Ød4	LE	LD +2.0 0	[Standard input gear A]				[Standard input gear B]				ØD2	Ød3 MAX	Radial runout	[Standard input gear A]	[Standard input gear B]	LF
					L	LA	LB	ØD1	L	LA	LB	ØD1				LC MIN	LC MIN	
105	65.4	11	8	22	192.5	77.5	15.5	65.4	225	80	18	78	65h8	42.0	0.066	78	83	103
118		11	8	22	192.5	77.5			225	80				38.3	0.059	78	83	
142.44		11	8	22	192.5	77.5			225	80				33.2	0.059	78	83	
159		11	8	22	192.5	77.5			225	80				31.7	0.055	78	83	
183		11	8	22	192.5	77.5			225	80				23.6	0.059	78	83	
203.52		11	8	22	192.5	77.5			225	80				22.7	0.059	78	83	

Gear tooth specifications

Refer to the specifications and materials shown in the following tables when designing with a processed or non-standard input gear.

Common specifications	
Tooth profile	Full depth
Pressure angle (°)	20
Precision	JIS B 1702:1976, grade 5

Spur gear tooth surface hardness and material	
Heat treatment	Carburizing, quenching and tempering
Surface hardness	HRC 58 to 62
Effective case depth	0.3 to 0.7*1
Material	SCM415 Normalizing
Alternate material	SCM420 Normalizing

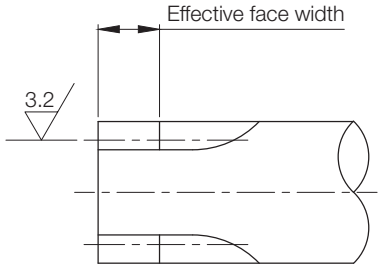

*1. The values for some RV-25N, RV-42N, and RV-380N units will differ depending on the module.

Model	RV-25N		RV-42N		RV-380N	
Module	0.8	1.25	1.0	1.25	1.0	1.25 to 2.0
Effective case depth<Hv 513>(mm)	0.2 to 0.6	0.3 to 0.7	0.2 to 0.6	0.3 to 0.7	0.2 to 0.6	0.3 to 0.7

<Specifications by model>

Model	RV-25N					
Ratio code	41	81	107.66	126	137	164.07
Module	1.25	1.25	0.8	0.8	0.8	0.8
No. of teeth	21	14	18	16	15	13
Shift coefficient	-0.193	+0.6	+0.25	+0.25	+0.25	+0.25
Base tangent length(mm)	$5.738^{-0.017}_{-0.042}$	$9.984^{-0.017}_{-0.042}$	$6.243^{-0.017}_{-0.042}$	$6.220^{-0.017}_{-0.042}$	$6.210^{-0.017}_{-0.042}$	$3.825^{-0.017}_{-0.042}$
No. of teeth	(2)	(3)	(3)	(3)	(3)	(2)
Min. effective face width (mm)	13	12	12	12	12	13

Model	RV-42N					
Ratio code	41	81	105	126	141	164.07
Module	1.25	1.25	1.25	1.0	1.25	1.0
No. of teeth	27	18	15	16	12	13
Shift coefficient	+0.5	+0.5	+0.5	+0.5	+0.5	+0.5
Base tangent length(mm)	$13.816^{-0.017}_{-0.042}$	$9.968^{-0.017}_{-0.042}$	$9.916^{-0.017}_{-0.042}$	$7.946^{-0.017}_{-0.042}$	$9.863^{-0.017}_{-0.042}$	$7.904^{-0.017}_{-0.042}$
No. of teeth	(4)	(3)	(3)	(3)	(3)	(3)
Min. effective face width (mm)	15	12.5	12.5	12.5	12.5	12.5

Model	RV-60N					
Ratio code	41	81	102.17	121	145.61	161
Module	1.25	1.5	1.25	1.25	1.25	1.25
No. of teeth	30	17	17	15	13	12
Shift coefficient	+0.25	+0.5	+0.25	+0.5	+0.25	+0.5
Base tangent length(mm)	$13.655^{-0.023}_{-0.061}$	$11.941^{-0.023}_{-0.061}$	$9.737^{-0.023}_{-0.061}$	$9.916^{-0.023}_{-0.061}$	$5.977^{-0.023}_{-0.061}$	$9.863^{-0.023}_{-0.061}$
No. of teeth	(4)	(3)	(3)	(3)	(2)	(3)
Min. effective face width (mm)	14	13.5	13.5	13.5	13.5	13.5

Model	RV-80N					
Ratio code	41	81	101	129	141	171
Module	1.5	1.25	1.25	1.25	1.25	1.25
No. of teeth	27	21	18	15	14	12
Shift coefficient	0	-0.193	+0.5	+0.5	+0.5	+0.5
Base tangent length(mm)	$16.065^{-0.023}_{-0.061}$	$5.738^{-0.023}_{-0.061}$	$9.968^{-0.023}_{-0.061}$	$9.916^{-0.023}_{-0.061}$	$9.898^{-0.023}_{-0.061}$	$9.863^{-0.023}_{-0.061}$
No. of teeth	(4)	(2)	(3)	(3)	(3)	(3)
Min. effective face width (mm)	17.5	16	14.5	14.5	14.5	14.5

Model	RV-100N					
Ratio code	41	81	102.17	121	141	161
Module	1.5	1.5	1.5	1.5	1.25	1.5
No. of teeth	30	20	17	15	16	12
Shift coefficient	+0.5	0	+0.5	+0.15	+0.5	+0.5
Base tangent length(mm)	$21.070^{-0.023}_{-0.061}$	$11.491^{-0.023}_{-0.061}$	$11.941^{-0.023}_{-0.061}$	$7.111^{-0.023}_{-0.061}$	$9.933^{-0.023}_{-0.061}$	$11.836^{-0.023}_{-0.061}$
No. of teeth	(5)	(3)	(3)	(2)	(3)	(3)
Min. effective face width (mm)	19	15	15	15	15	15

Model	RV-125N					
Ratio code	41	81	102.17	121	145.61	161
Module	1.5	1.5	1.5	1.5	1.5	1.5
No. of teeth	30	20	17	15	13	12
Shift coefficient	+0.5	+0.5	+0.5	+0.5	+0.5	+0.5
Base tangent length(mm)	$21.070^{-0.023}_{-0.061}$	$12.004^{-0.023}_{-0.061}$	$11.941^{-0.023}_{-0.061}$	$11.900^{-0.023}_{-0.061}$	$11.857^{-0.023}_{-0.061}$	$11.836^{-0.023}_{-0.061}$
No. of teeth	(5)	(3)	(3)	(3)	(3)	(3)
Min. effective face width (mm)	19	15	15	15	15	15

Model	RV-160N					
Ratio code	41	81	102.81	125.21	156	201
Module	2.0	1.5	1.25	1.25	1.25	1.25
No. of teeth	24	22	22	19	16	13
Shift coefficient	+0.5	+0.228	+0.5	+0.5	+0.5	+0.5
Base tangent length(mm)	$22.021^{-0.035}_{-0.085}$	$11.766^{-0.035}_{-0.085}$	$13.728^{-0.035}_{-0.085}$	$9.986^{-0.035}_{-0.085}$	$9.933^{-0.035}_{-0.085}$	$9.881^{-0.035}_{-0.085}$
No. of teeth	(4)	(3)	(4)	(3)	(3)	(3)
Min. effective face width (mm)	17	16.5	16.5	16.5	16.5	16.5

Model	RV-380N					
Ratio code	75	93	117	139	162	185
Module	2.0	2.0	1.5	1.25	1.5	1.0
No. of teeth	23	20	23	24	18	24
Shift coefficient	0	0	+0.25	+0.25	+0.25	+0.25
Base tangent length(mm)	$15.405^{-0.035}_{-0.085}$	$15.321^{-0.035}_{-0.085}$	$11.810^{-0.035}_{-0.085}$	$13.550^{-0.035}_{-0.085}$	$11.705^{-0.035}_{-0.085}$	$10.840^{-0.035}_{-0.085}$
No. of teeth	(3)	(3)	(3)	(4)	(3)	(4)
Min. effective face width (mm)	21	21	23.5	23.5	23.5	23.5

Model	RV-500N					
Ratio code	81	105	123	144	159	192.75
Module	2.0	1.75	1.5	1.25	1.25	1.75
No. of teeth	26	25	26	28	26	16
Shift coefficient	0	0	+0.5	+0.5	+0.5	+0.5
Base tangent length(mm)	$15.489^{-0.035}_{-0.085}$	$13.528^{-0.035}_{-0.085}$	$16.558^{-0.035}_{-0.085}$	$13.833^{-0.035}_{-0.085}$	$13.798^{-0.035}_{-0.085}$	$13.906^{-0.035}_{-0.085}$
No. of teeth	(3)	(3)	(4)	(4)	(4)	(3)
Min. effective face width (mm)	22.5	23	22	22	23	22

Model	RV-700N					
Ratio code	105	118	142.44	159	183	203.52
Module	2.0	2.0	1.75	1.5	2.0	1.75
No. of teeth	27	24	25	26	18	19
Shift coefficient	+0.25	+0.847	+0.25	+0.824	+0.15	+0.25
Base tangent length(mm)	$21.763^{-0.035}_{-0.085}$	$22.496^{-0.035}_{-0.085}$	$18.994^{-0.035}_{-0.085}$	$21.318^{-0.035}_{-0.085}$	$15.470^{-0.035}_{-0.085}$	$13.681^{-0.035}_{-0.085}$
No. of teeth	(4)	(4)	(4)	(5)	(3)	(3)
Min. effective face width (mm)	22	22	22	22	22	22

Lubricant VIGOGREASE®

Lubricant

The standard lubricant for RV precision reduction gears is grease.
In order to take advantage of the performance of RV precision reduction gears, we recommend that you use Nabtesco VIGOGREASE grease.
VIGOGREASE was specifically developed for use with Nabtesco products and does not take into account the use with products from other companies.
It is therefore recommended that you refrain from using VIGOGREASE with products from any other company.
Should for any reason it be necessary to use VIGOGREASE with another company's product, Nabtesco assumes no responsibility whatsoever for any breakdown, malfunction, or other trouble such as with the corresponding reduction gear, the equipment or system it is used in.
In such cases, it should also be understood that Nabtesco cannot comply with any request to inspect the quality of the corresponding grease, etc.

<Approved lubricant brand>

Grease	
Nabtesco	VIGOGREASE RE0

Note: Do not mix with other lubricants.

Amount of lubricant

RV precision reduction gears are not applied with lubricant when shipped. Be sure to design your equipment so that the necessary amount of our authorized lubricant can be applied. (When pneumatic pressure is used for applying the lubricant, set the pressure below 0.03 MPa.)
The amount of grease the reduction gear requires will differ according to the orientation in which the gear is installed. The amount of grease required and the target range (the ■ areas in the diagram) are indicated below for each direction of installation.

Note: 1. The spaces (indicated by the ▨ and ▩ areas in the diagram) on the shaft installation side and the motor installation side are not included in the target range but should also be filled. However, since there is a possibility of high internal pressure and that an oil seal may fall off or lubricant may leak if overfilled, be sure to leave about 10% of the total volume*1 of those spaces and the space inside the reduction gear.
***1. Total volume: Volume of the space inside the reduction gear + volume of ▨ and ▩**
2. Control the amount of lubricant to be applied when replacing the lubricant as well.
3. As the seal cap attached to the center hole of the reduction gear will be used for adjusting the flow of the lubricant when it is applied, do not remove it.

<Horizontal shaft installation>

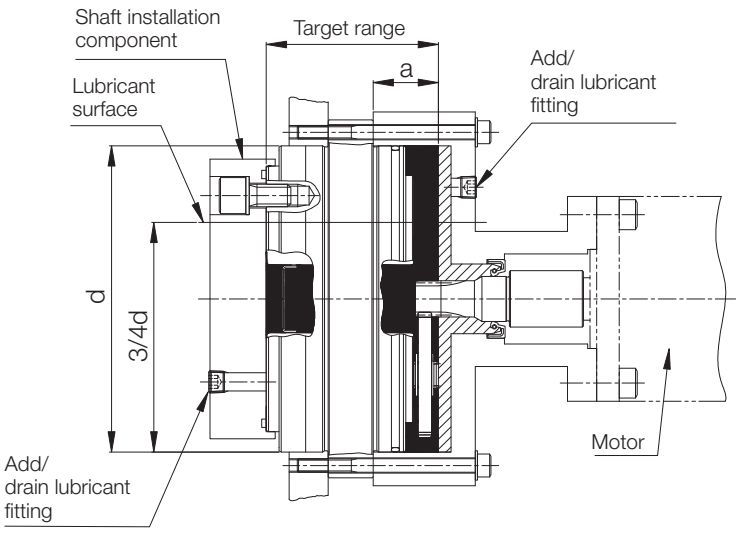

Model	Internal capacity of reduction gear (cc)	Required amount (cc)	Required amount (g)*1	Dimensions a*2 (mm)
RV-25N	252	209	(188)	32.2
RV-42N	377	313	(282)	32.5
RV-60N	529	439	(395)	32.3
RV-80N	607	504	(454)	37.6
RV-100N	811	673	(606)	36.9
RV-125N	887	736	(662)	40.7
RV-160N	1,036	860	(774)	40.1
RV-380N	2,182	1,811	(1,630)	54.2
RV-500N	2,704	2,245	(2,021)	53.4
RV-700N	4,554	3,780	(3,402)	62.2

*1. Density of VIGOGREASE RE0: 0.9 g/cc
*2. "a" does not correspond to the crank shaft tip position.

<Vertical shaft installation (1)>

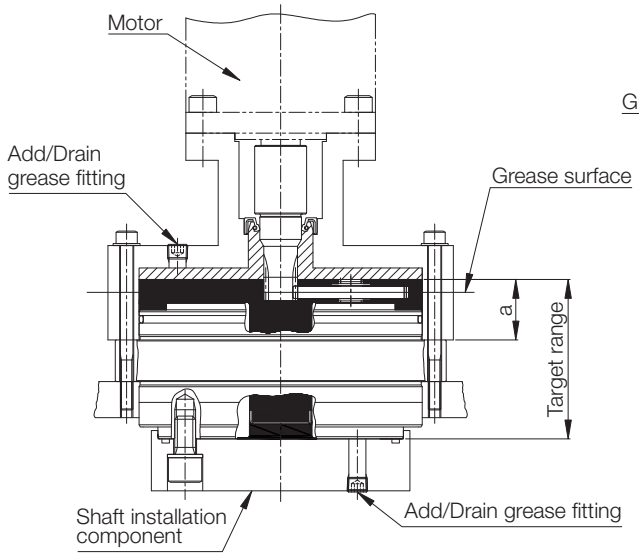

<Vertical shaft installation (2)>

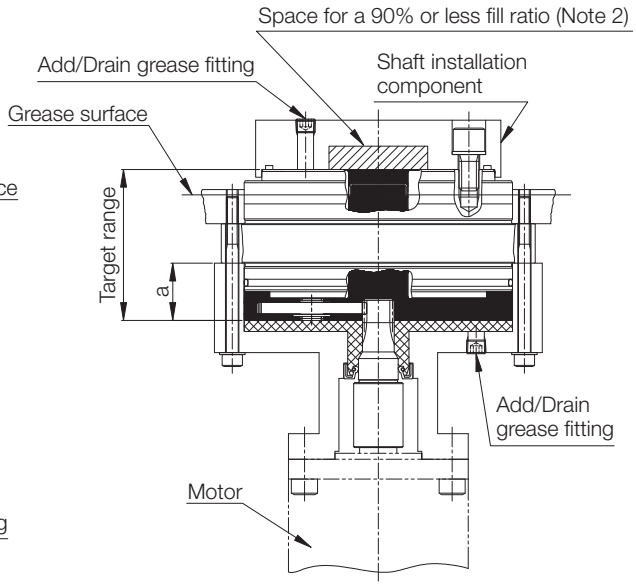

Model	Internal capacity of reduction gear (cc)	Required amount (cc)	(g)*1	Dimensions a*2 (mm)
RV-25N	252	239	(215)	32.2
RV-42N	377	358	(322)	32.5
RV-60N	529	503	(453)	32.3
RV-80N	607	577	(519)	37.6
RV-100N	811	770	(693)	36.9

Model	Internal capacity of reduction gear (cc)	Required amount (cc)	(g)*1	Dimensions a*2 (mm)
RV-125N	887	843	(759)	40.7
RV-160N	1,036	984	(886)	40.1
RV-380N	2,182	2,073	(1,866)	54.2
RV-500N	2,704	2,569	(2,312)	53.4
RV-700N	4,554	4,327	(3,894)	62.2

*1. Density of VIGOGREASE RE0: 0.9 g/cc

*2. “a” does not correspond to the crank shaft tip position.

Note: 1. Set the amount of grease so that there is no space below the grease surface, or in the motor installation side of “Vertical shaft installation (2)” (the ▩ area in the diagram above).

2. When inserting the required amount of lubricant, allow space above the grease surface so that the fill rate does not exceed 90%. (Ex.: The ▨ area in the “Vertical shaft installation (2)” diagram.)

Grease replacement time

During proper operation of the reduction gear, the standard grease replacement time due to lubricant degradation is 20,000 hours.

However, when operation involves a reduction gear surface temperature above 40°C (the ▩ area in the right diagram), the state of the lubricant should be checked in advance and the grease replaced earlier as necessary.

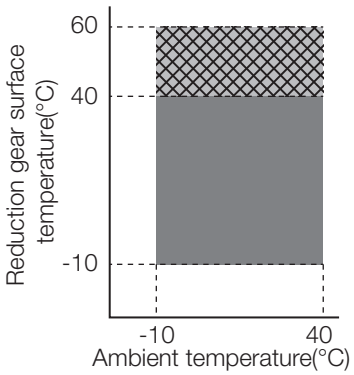

Running-in operation

It is recommended that the running-in operation is performed after the Nabtesco-specified lubricant is added. Abnormal noise or torque irregularity may occur during operation, depending on the characteristics of the lubricant. There is no problem with the quality when the symptom disappears after the running-in operation is performed for 30 minutes or more (until the surface temperature of the reduction gear body reaches around 50°C).

Inertia moment calculation formula

Shape	I(kgm^2)
1. Cylinder solid 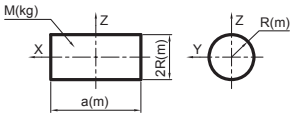	$I_x = \frac{1}{2} M R^2$ $I_y = \frac{1}{4} M \left(R^2 + \frac{a^2}{3} \right)$ $I_z = I_y$
2. Cylinder hollow 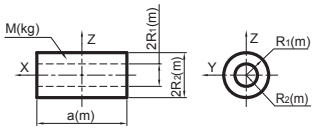	$I_x = \frac{1}{2} M \left(R_1^2 + R_2^2 \right)$ $I_y = \frac{1}{4} M \left\{ \left(R_1^2 + R_2^2 \right) + \frac{a^2}{3} \right\}$ $I_z = I_y$
3. Oval cross section 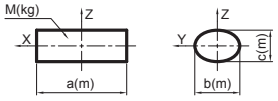	$I_x = \frac{1}{16} M \left(b^2 + c^2 \right)$ $I_y = \frac{1}{4} M \left(\frac{c^2}{4} + \frac{a^2}{3} \right)$ $I_z = \frac{1}{4} M \left(\frac{b^2}{4} + \frac{a^2}{3} \right)$
4. Rectangle 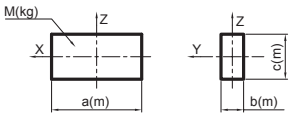	$I_x = \frac{1}{12} M \left(b^2 + c^2 \right)$ $I_y = \frac{1}{12} M \left(a^2 + c^2 \right)$ $I_z = \frac{1}{12} M \left(a^2 + b^2 \right)$
5. General application 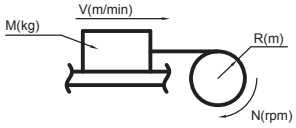	$I = \frac{M}{4} \left(\frac{V}{\pi \times N} \right)^2 = MR^2$

Shape	I(kgm^2)
6. Horizontal movement by conveyor 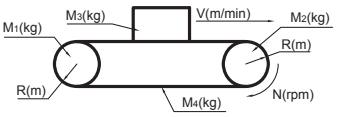	$I = \left(\frac{M_1 + M_2}{2} + M_3 + M_4 \right) \times R^2$
7. Horizontal movement by lead screw 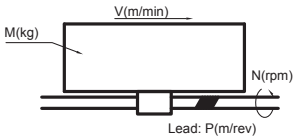	$I = \frac{M}{4} \left(\frac{V}{\pi \times N} \right)^2 = \frac{M}{4} \left(\frac{P}{\pi} \right)^2$
8. Up/down movement by hoist 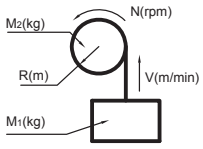	$I = M_1 R^2 + \frac{1}{2} M_2 R^2$
9. Parallel axis theorem 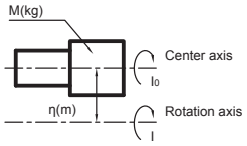	$I = I_0 + M\eta^2$ I_0 : Moment of inertia of any object about an axis through its center of mass I : Moment of inertia about any axis parallel to the axis through its center of mass η : Perpendicular distance between the above two axes

Troubleshooting checksheet

Check the following items in the case of trouble like abnormal noise, vibration, or malfunctions.
When it is not possible to resolve an abnormality even after verifying the corresponding checkpoint, obtain a “Reduction Gear Investigation Request Sheet” from our Website, fill in the necessary information, and contact our Service Center.

[URL]: **http://precision.nabtesco.com/documents/request.html**

The trouble started immediately after installation of the reduction gear

Checked	Checkpoint
	Make sure the equipment’s drive section (the motor side or the reduction gear output surface side) is not interfering with another component.
	Make sure the equipment is not under a greater than expected load (torque, moment load, thrust load).
	Make sure the required number of bolts are tightened uniformly with the specified tightening torque.
	Make sure the reduction gear, motor, or your company’s components are not installed at a slant.
	Make sure the specified amount of Nabtesco-specified lubricant has been added.
	Make sure there are no problems with the motor’s parameter settings.
	Make sure there are no components resonating in unity.
	Make sure the input gear is appropriately installed on the motor.
	Make sure there is no damage to the surface of the input gear teeth.
	Make sure the input gear specifications (precision, number of teeth, module, shift coefficient, dimensions of each part) are correct.
	Make sure the flange and other components are designed and manufactured with the correct tolerances.

The trouble started during operation

Checked	Checkpoint
	Make sure the equipment has not been in operation longer than the calculated service life.
	Make sure the surface temperature of the reduction gear is not higher than normal during operation.
	Make sure the operation conditions have not been changed.
	Make sure there are no loose or missing bolts.
	Make sure the equipment is not under a greater than expected load (torque, moment load, thrust load).
	Make sure the equipment’s drive section is not interfering with another component.
	Make sure an oil leak is not causing a drop in the amount of lubricant.
	Make sure there are no external contaminants in the gear, such as moisture or metal powder.
	Make sure no lubricant other than that specified is being used.

APPLICATION WORKSHEET

Please supply us the following items when ordering RV series Reduction Gears.

1. How used

Name of Machine:

Applied to:

2. Model

RV-

3. Conditions of load

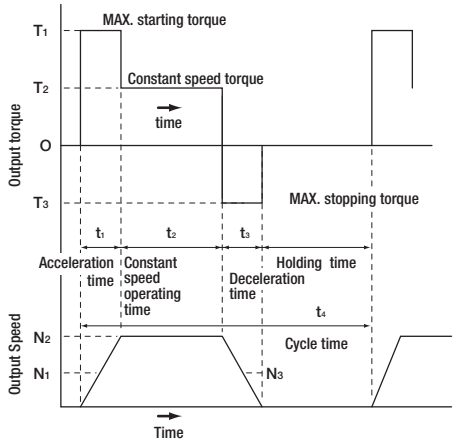

	For starting (MAX)	For constant speed	For stopping (MAX)	Cycle time
Load torque (Nm)	T_1	T_2	T_3	____
Speed (rpm)	N_1	N_2	N_3	____
Time (s)	t_1	t_2	t_3	t_4

Working hours Cycle/Day: Day/Year: Year

4. External load conditions

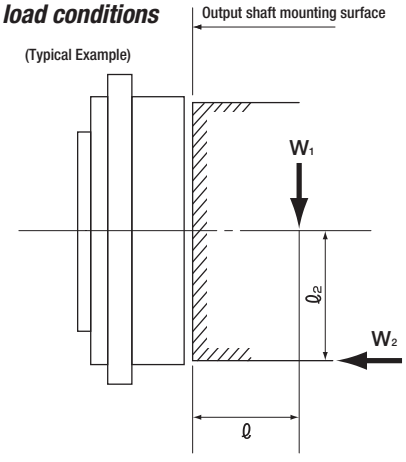

(W_1) : (N) (ℓ) : (N)

(W_2) : (N) (ℓ_2) : (N)

5. Operating environment

Operating environment temperature ____°C

6. Installation

☐ ***Horizontal Vertical*** (☐ ***Upper motor*** ☐ ***Lower Motor***)

Illustration for installation

7. Input gear specification

Reduction speed ratio: i=

☐ ***Standard size,*** ☐ ***Other***

Input gear Prepared by ☐ ***User*** ☐ ***TS Corporation***

Required dimension of input gear (Illustration)

8. Driving portion (Servo motor)

☐ ***Manufacturer*** ☐ ***Model*** ( )

Capacity: ***(kW)***

Rated torque: ***(Nm)***

Speed: ***(rpm)***

Shape of the shaft ***(mm)***

9. Other

VIGOGREASE® Ordering Information

Application and features

This product is a lubricant specially made for Nabtesco precision reduction gears and can achieve high efficiency and extended service life for our reduction gears.

Package

Select from among the following container sizes.

Package	Part number	Style of packing
2kg	VIGOG-RE0-2KG	Can (in cardboard box)
16kg	VIGOG-RE0-16KG	Pail
170kg	VIGOG-RE0-170KG	Drum

Caution

Be sure to use this product only after fully and carefully reading the cautions, etc., on the container.

Contact Information

Asia and others (Service Center, Tsu Plant, Nabtesco Corporation)
Phone: +81-59-237-4672 FAX: +81-59-237-4697

Europe & Africa (Nabtesco Precision Europe GmbH)
Phone: +49-211-173790 FAX: +49-211-364677
E-mail: info@nabtesco-precision.de

North & South Ameria (Nabtesco Motion Control, Inc.)
Phone: +1-248-553-3020 FAX: +1-248-553-3070
E-mail: info@nabtescomotioncontrol.com

China (Shanghai Nabtesco Motion-equipment Trading Co., Ltd.)
Phone: +86-21-33632200 FAX: +86-21-33632655
E-mail: info@nabtesco-motion.cn

MEMO

Warranty

1. In the case where Nabtesco confirms that a defect of the Product was caused due to Nabtesco's design or manufacture within the Warranty Period of the Product, Nabtesco shall repair or replace such defective Product at its cost. The Warranty Period shall be from the delivery of the Product by Nabtesco or its distributor to you ("Customer") until the end of one (1) year thereafter, or the end of two thousand (2,000) hours running of the Product installed into Customer's equipment, whichever comes earlier.
2. Unless otherwise expressly agreed between the parties in writing, the warranty obligations for the Product shall be limited to the repair or replacement set forth herein. OTHER THAN AS PROVIDED HEREIN, THERE ARE NO WARRATIES ON THE PRODUCT, EXPRESS OR IMPLIED, INCLUDING WITHOUT LIMITATION ANY IMPLIED WARRANTY OF MERCHANTABILITY OR FITNESS FOR A PARTICULAR PURPOSE.
3. The warranty obligation under the Section 1 above shall not apply if:
   a) the defect was caused due to the use of the Product deviated from the Specifications or the working conditions provided by Nabtesco;
   b) the defect was caused due to exposure to foreign substances or contamination (dirt, sand etc.)
   c) lubricant or spare part other than the ones recommended by Nabtesco was used in the Product;
   d) the Product was used in an unusual environment (such as high temperature, high humidity, a lot of dust, corrosive/volatile/inflammable gas, pressurized/depressurized air, under water/liquid or others except for those expressly stated in the Specifications);
   e) the Product was disassembled, re-assembled, repaired or modified by anyone other than Nabtesco;
   f) the defect was caused due to the equipment into which the Product was installed;
   g) the defect was caused due to an accident such as fire, earthquake, lightning, flood or others; or
   h) the defect was due to any cause other than the design or manufacturing of the Product.
4. The warranty period for the repaired/replaced Product/part under the Section 1 above shall be the rest of the initial Warranty Period of the defective Product subjected to such repair/replace.

Rev. 009

Nabtesco

Nabtesco Corporation

Europe and Africa

Nabtesco Precision Europe GmbH
Tiefenbroicher Weg 15, 40472 Düsseldorf, Germany
TEL: +49-211-173790 FAX: +49-211-364677
E-MAIL: info@nabtesco.de www.nabtesco.de

North and South America

Nabtesco Motion Control Inc. in U.S.A (North America & South America)
23976 Freeway Park Drive, Farmington Hills, MI 48335, USA
TEL: +1-248-553-3020 FAX: +1-248-553-3070
E-MAIL: engineer@nabtescomotioncontrol.com www.nabtescomotioncontrol.com

China

Shanghai Nabtesco Motion-equipment Co., Ltd.
Room 1706, Hong Jia Tower, No. 388 Fu Shan Road, Pudong New Area, Shanghai 200122, China
TEL: +86-21-3363-2200 FAX: +86-21-3363-2655
E-MAIL: info@nabtesco-motion.cn www.nabtesco-motion.cn

Asia and others

Nabtesco Corporation
Osaka Sales Office
21st Fl, Dojima Avanza, 1-6-20 Dojima, Kita-ku, Osaka 530-0003, Japan
TEL: +81-6-6341-7180 FAX: +81-6-6341-7182

Tsu Plant
594 Icchoda, Katada-cho, Tsu, Mie 514-8533, Japan
TEL: +81-59-237-4600 FAX: +81-59-237-4610

E-MAIL: P_Information@nabtesco.com http://precision.nabtesco.com/

- Nabtesco, VIGOGREASE, RV are registered trademarks or trademarks of Nabtesco Corporation.
- Specifications are subject to change without notice.
- The PDF data of this catalog can be downloaded from the following website.
  http://precision.nabtesco.com/
  If any addition or modification is made to the published information, the PDF data may be updated before the printed catalog.
  Due to this, please note that some contents of the PDF data may be changed or revised from those in this catalog.
- Unauthorized reprinting, reproduction, copying, or translation of this catalog in whole or in part is strictly prohibited.

CAT.150730 **(Issued on July 30, 2015)**